TAYLOR PIPE SUPPORTS

Product Specifications

STRUT PRODUCTS

For the most up to date information visit our website:
www.taylorassociates.com

PICTORIAL INDEX

TAYLORSTRUT™

FIG. TS Page 2
STRUT CHANNEL
and END CAPS

FIG. 900's Page 3
STRUT NUTS

Fig. 901 Page 3
ROD STIFFENER

FIG. 910's Page 3
STRUT SLIDE NUT

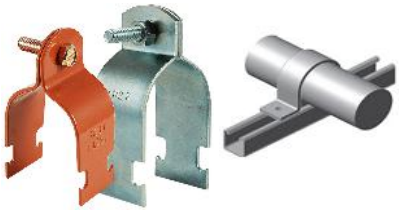

FIG. 910's Page 4
STRUT PIPE CLAMPS

FIG. 8500 Page 6
STRUT CUSHION CLAMP

Fig. 920 Page 7
STRUT CABLE CLAMP

Fig. TY300 Page 8
4 BEARING TROLLEY ASSY.

FLAT PLATE FITTINGS
Page 9 - 12

90° ANGLE FITTINGS
Page 13 - 18

ANGULAR FITTINGS
Page 19

POST BASES
Page 20 - 21

U FITTINGS
Page 22 - 23

WING FITTINGS
Page 24 - 26

Z FITTINGS
Page 27 - 29

STRUT BEAM CLAMPS
Page 30 - 32

MISCELLANEOUS FITTINGS
Page 33 - 34

STRUT CHANNEL

Figure
TS

SIZE RANGE: 1" and 1 5/8"
MATERIAL: Cold Rolled Steel
FINISH: Pre-Galvanized
SERVICE: Various metal framing and fastening applications.
ORDERING: Specify product #, profile, finish and length.

ALSO AVAILABLE IN:

Other Sizes & Lengths, Stainless Steel and Aluminum

SPECIFICATION DATA

Profile #	Profile (H x W)	Configuration	Material	Finish	LBS / FT	Standard Length	Bundle QTY
TS2-PG	1" x 1 5/8"	SOLID	12Ga	Pre -Galv.	1.44	10 Ft	50
TS2HS-PG	1" x 1 5/8"	**HALF SLOT**	12Ga	Pre -Galv.	1.36	10 Ft	50
TS2-SS6	1" x 1 5/8"	SOLID	12Ga	Stainless 316	1.44	10 Ft	50
TS4-PG	1 5/8" x 1 5/8"	SOLID	12Ga	Pre -Galv.	1.90	10 Ft	50
TS4HS-PG	1 5/8" x 1 5/8"	**HALF SLOT**	12Ga	Pre -Galv.	1.82	10 Ft	50
TS4-SS4	1 5/8" x 1 5/8"	SOLID	12Ga	Stainless 304	1.90	10 Ft	50
TS4HS-SS4	1 5/8" x 1 5/8"	**HALF SLOT**	12Ga	Stainless 304	1.82	10 Ft	50
TS4-SS6	1 5/8" x 1 5/8"	SOLID	12Ga	Stainless 316	1.90	10 Ft	50
TS4HS-SS6	1 5/8" x 1 5/8"	**HALF SLOT**	12Ga	Stainless 316	1.82	10 Ft	50

SPECIFICATIONS OF OTHER SIZES AND PROFILES ALSO AVAILABLE
(HALF SLOT CONFIGURATION - HOLES at 2" CENTERS, 1 1/8" LONG, 9/16" WIDE)

END CAPS	
Size	For Profile
EC100	1" x 1 5/8"
EC158	1 5/8" x 1 5/8"

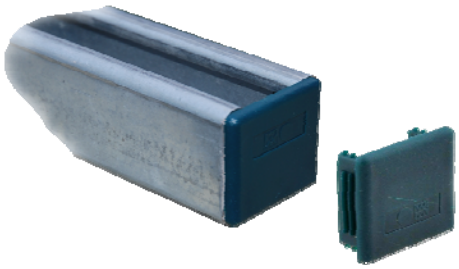

TAYLORSTRUT

TAYLORSTRUT

STRUT NUTS

Strut Nut - NO SPRING — 900NS

Standard Finish: ELECTRO-PLATED ZINC
*All STAINLESS STEEL = Type 316L (1/4", 3/8" & 1/2" ONLY)

PART #	THREAD SIZE	MAT. THICKNESS	WT. PER 100
900NS 1/4	1/4-20	1/4"	7 #
900NS 3/8	3/8-16	3/8"	9 #
900NS 1/2	1/2-13	3/8"	9 #
900NS 5/8	5/8-11	3/8"	17 #
900NS 3/4	3/4-10	3/8"	14 #

Strut Nut - SHORT SPRING — 900SH

Standard Finish: ELECTRO-PLATED ZINC
*All STAINLESS STEEL = Type 316L

PART #	THREAD SIZE	MAT. THICKNESS	WT. PER 100
900SH 1/4	1/4-20	1/4"	7 #
900SH 3/8	3/8-16	3/8"	9 #
900SH 1/2	1/2-13	3/8"	9 #

Strut Nut - REGULAR SPRING — 900RG

Standard Finish: ELECTRO-PLATED ZINC
*All STAINLESS STEEL = Type 316L (1/4", 3/8" & 1/2" ONLY)

PART #	THREAD SIZE	MAT. THICKNESS	WT. PER 100
900RG 1/4	1/4-20	1/4"	7 #
900RG 5/16	5/16-18	1/4"	7 #
900RG 3/8	3/8-16	3/8"	9 #
900RG 1/2	1/2-13	3/8"	9 #
900RG 5/8	5/8-11	1/2"	18 #
900RG 3/4	3/4-10	1/2"	16 #
900RG 7/8	7/8-9	1/2"	14 #

ROD STIFFENER — 901

For 3/8" through 5/8" ATR
Strut ordered separately
Standard Finish: Zinc Plated

Strut Slide Nut — 902W

Standard Finish: ELECTRO-PLATED ZINC

	PART #	THREAD SIZE	BOX QTY.	WT. PER 100
Imperial	902W 1/4	1/4-20	20	13 #
	902W 3/8	3/8-16	20	14 #
	902W 1/2	1/2-13	20	14 #
Metric	902W M8	M8-1.25	20	13 #
	902W M10	M10-1.5	20	14 #
	902W M12	M12-1.75	20	14 #

STANDARD FINISHES: Zinc Plated
ALSO AVAILABLE IN: STAINLESS STEEL

TAYLORSTRUT

STRUT CLAMPS

Zinc Strut Pipe Clamp - RIGID 910R

*Stainless Steel 910R 2 - 910R 8 = 14 GA.

PART No.	PIPE SIZE	O.D.	*GAUGE	Design Load	Wt. Per 100	Std. Pkg.
910R 3/8	3/8	0.675	16 GA	400 #	9 #	100
910R 1/2	1/2	0.840	16 GA	400 #	14 #	100
910R 3/4	3/4	1.050	14 GA	600 #	17 #	100
910R 1	1	1.315	14 GA	600 #	18 #	100
910R 1 1/4	1 1/4	1.660	14 GA	600 #	22 #	100
910R 1 1/2	1 1/2	1.900	14 GA	600 #	23 #	100
910R 2	2	2.375	14 GA	600 #	27 #	50
910R 2 1/2	2 1/2	2.875	12 GA	800 #	40 #	25
910R 3	3	3.500	12 GA	800 #	50 #	25
910R 3 1/2	3 1/2	4.000	12 GA	800 #	52 #	25
910R 4	4	4.500	12 GA	800 #	54 #	25
910R 5	5	5.563	12 GA	800 #	72 #	20
910R 6	6	6.625	12 GA	800 #	102 #	25
910R 8	8	8.625	12 GA	800 #	104 #	25

ALSO AVAILABLE IN: Stainless Steel (316 SS)

Zinc Strut Pipe Clamp - EMT 910E

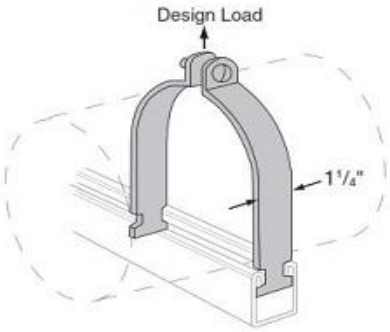

PART No.	PIPE SIZE	O.D.	GAUGE	Design Load	Wt. Per 100	Std. Pkg.
910E 3/8	3/8	0.577	16 GA	400 #	7 #	100
910E 1/2	1/2	0.706	16 GA	400 #	12 #	100
910E 3/4	3/4	0.922	16 GA	400 #	14 #	100
910E 1	1	1.163	14 GA	600 #	16 #	100
910E 1 1/4	1 1/4	1.510	14 GA	600 #	20 #	100
910E 1 1/2	1 1/2	1.740	14 GA	600 #	21 #	100
910E 2	2	2.197	14 GA	600 #	23 #	50

ALSO AVAILABLE IN: Stainless Steel (316 SS)

DESIGN LOAD INCLUDES A SAFETY FACTOR OF 5.0
(safety factor = ratio of ultimate load to the design load)

Zinc plated hex head screw and nut included.

Copper-Gard Strut Pipe Clamp - COPPER TUBING 910C

Copper plated hex head screw and nut included.

PART No.	PIPE SIZE	O.D.	GAUGE	Design Load	Wt. Per 100	Std. Pkg.
910C 3/8	3/8	0.500	16 GA	400 #	9 #	100
910C 1/2	1/2	0.625	16 GA	400 #	14 #	100
910C 3/4	3/4	0.875	16 GA	400 #	16 #	100
910C 1	1	1.125	14 GA	600 #	18 #	100
910C 1 1/4	1 1/4	1.375	14 GA	600 #	22 #	100
910C 1 1/2	1 1/2	1.625	14 GA	600 #	23 #	100
910C 2	2	2.125	14 GA	600 #	25 #	100
910C 2 1/2	2 1/2	2.625	12 GA	800 #	40 #	50
910C 3	3	3.125	12 GA	800 #	50 #	50
910C 3 1/2	3 1/2	3.625	12 GA	800 #	52 #	25
910C 4	4	4.125	12 GA	800 #	54 #	25
910C 5	5	5.125	12 GA	800 #	72 #	25
910C 6	6	6.125	12 GA	800 #	102 #	25

DESIGN LOAD INCLUDES A SAFETY FACTOR OF 5.0
(safety factor = ratio of ultimate load to the design load)

ALSO AVAILABLE IN: STAINLESS STEEL and ALUMINUM

TAYLORSTRUT™

Strut Cushion Clamp — 8500

SIZES: 1/4" OD through 4 1/8" OD
MATERIAL: Electro-galvanized steel with thermoplastic insulating liner.
ALSO AVAILABLE IN: Stainless Steel (304 SS) and Stainless Steel (316 SS)
SERVICE: Prevents shock, vibration, corrosion, and metal contact in strut fastening applications.

PART No.	Copper Tube	IPS	Weight Each (LBS)	Pkg. Qty.
8500 - 1/4OD			0.11	25
8500 - 3/8OD	1/4"		0.11	25
8500 - 1/2OD	3/8"		0.11	25
8500 - 5/8OD	1/2"		0.12	25
8500 - 3/4OD	5/8"		0.13	25
8500 - 7/8OD	3/4"	1/2"	0.20	25
8500 - 1OD			0.21	25
8500 - 1 1/8OD	1"	3/4"	0.27	25
8500 - 1 1/4OD			0.29	10
8500 - 1 3/8OD	1 1/4"	1"	0.31	10
8500 - 1 1/2OD			0.35	10
8500 - 1 5/8OD	1 1/2"	1 1/4"	0.40	10
8500 - 1 7/8OD		1 1/2"	0.42	10
8500 - 2OD			0.46	10
8500 - 2 1/8OD	2"		0.49	10
8500 - 2 3/8OD		2"	0.60	10
8500 - 2 5/8OD	2 1/2"		0.62	10
8500 - 3 1/8OD	3"		0.65	10
8500 - 4 1/8OD	4"		0.90	10

#46 HOLD DOWN CLAMP

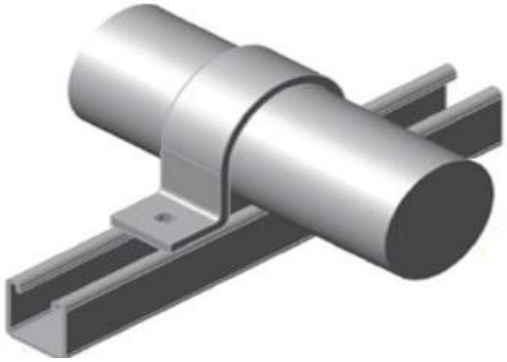

Finish: Bare Metal
alt: Zinc Plated, Hot Dipped Galvanized

Material: Carbon Steel
alt: Stainless Steel 304 and 316

Approvals: Complies with MSS SP-58 and SP-69 (Type 26).

Recommended: Designed to steady a horizontal run of pipe against a perpendicular section of strut channel or any other flat surface

Notes:

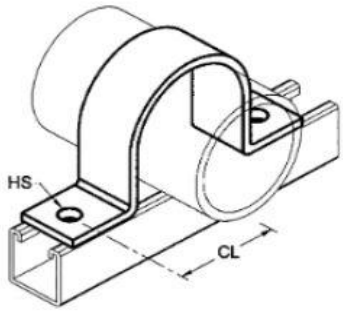

Iron Pipe Size	SPECIFICATION DATA			Weight Each (Lbs)
	HS (Hole Size)	CL	MATERIAL	
1/2	5/16	15/16	1/8 x 1 5/8	0.23
3/4	5/16	1	1/8 x 1 5/8	0.26
1	5/16	1 1/8	1/8 x 1 5/8	0.31
1 1/4	5/16	1 5/16	1/8 x 1 5/8	0.35
1 1/2	5/16	1 7/16	1/8 x 1 5/8	0.39
2	7/16	2 1/8	1/4 x 1 5/8	0.94
2 1/2	7/16	2 3/8	1/4 x 1 5/8	1.14
3	7/16	2 11/16	1/4 x 1 5/8	1.33
3 1/2	7/16	2 15/16	1/4 x 1 5/8	1.52
4	9/16	3 3/16	1/4 x 1 5/8	1.76
5	9/16	3 3/4	1/4 x 1 5/8	1.98
6	9/16	4 1/4	1/4 x 1 5/8	2.25
8	9/16	5 5/16	1/4 x 1 3/4	3.10
10	9/16	6 5/16	1/4 x 1 3/4	3.70
12	9/16	7 5/16	1/4 x 1 3/4	4.40
14	15/16	8 7/8	3/8 x 1 3/4	7.80
16	15/16	9 7/8	3/8 x 1 3/4	8.70
18	15/16	11 3/4	1/2 x 1 3/4	13.20
20	15/16	12 3/4	1/2 x 1 3/4	14.50
24	15/16	14 3/4	1/2 x 1 3/4	17

Note: If details and dimensions are critical to your application please insure you are referencing the most recent version of this specification sheet from our website.

TAYLORSTRUT™

STRUT CLAMPS

Strut 1 Piece Adjustable Cable Clamp — *920*

PART No.	O.D. RANGE	GAUGE	Wt. Per 100	Std. Pkg.
920-055	0.050 - 0.550	16 GA.	8	100
920-081	0.250 - 0.840	16 GA.	9	100
920-110	0.810 - 1.100	16 GA.	12	100
920-135	0.850 - 1.350	14 GA.	14	100
920-175	1.250 - 1.750	14 GA.	21	100
920-205	1.550 - 2.050	12 GA.	30	50
920-250	2.000 - 2.500	12 GA.	35	50
920-300	2.500 - 3.000	12 GA.	39	50
920-325	2.750 - 3.250	12 GA.	41	50
920-375	3.250- 3.750	12 GA.	47	25
920-425	3.750 - 4.250	12 GA.	54	25
920-475	4.250 - 4.750	12 GA.	58	25

*Stainless Steel 920-205 to 920-475 = 14 GA.

STANDARD FINISHES: Zinc Plated

ALSO AVAILABLE IN: STAINLESS STEEL and ALUMINUM

TWO BEARING TROLLEY ASSEMBLY

Figure
TY100

MATERIAL: Carbon Steel Plate
Stainless Steel Ball Bearings- Sealed
FINISH: Electro-Plated Zinc

SERVICE: Designed to roll inside strut channel.
Not for continuous cycling applications.

ORDERING: Figure number, name and finish.

PRODUCT #	DESIGN LOAD		RPM	PLATE MATERIAL	BOX QTY.
	LBS	kN			
TY100	150	(.67)	@600	1/4" x 1 1/4"	50
	225	(1.00)	@300		
	437	(1.94)	@100		

Safety Factor of 2.5

Wt/C 48Lbs

FOUR BEARING TROLLEY ASSEMBLY

Figure
TY300

MATERIAL: Carbon Steel Plate
Stainless Steel Ball Bearings- Sealed
FINISH: Electro-Plated Zinc

SERVICE: Designed to roll inside strut channel.
Not for continuous cycling applications.

ORDERING: Figure number, name and finish.

PRODUCT #	DESIGN LOAD		RPM	PLATE MATERIAL	BOX QTY.
	LBS	kN			
TY300	300	(1.33)	@600	1/4" x 3 1/2"	25
	450	(2.00)	@300		
	600	(2.67)	@100		

Safety Factor of 2.5

Wt/C 110Lbs

TAYLORSTRUT

TAYLORSTRUT

FLAT PLATE FITTINGS

Square Washer — FP100

Std Stocking Item

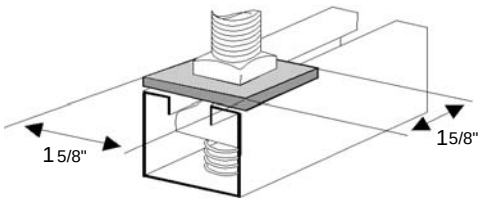

PART No.	ROD SIZE	Hole Dia.	Wt. Per 100
FP100-1/4	1/4"	5/16"	19#
FP100-5/16	5/16"	3/8"	18#
FP100-3/8	3/8"	7/16"	18#
FP100-1/2	1/2"	9/16"	17#
FP100-5/8	5/8"	11/16"	16#
FP100-3/4	3/4"	13/16"	15#

Std. Pkg. 100 Pcs.

No-Turn Washer — FP101

Non-Stock Item
Priced on Application

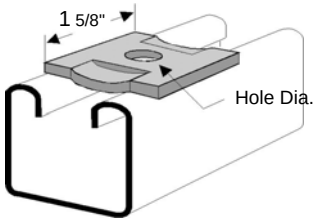

PART No.	ROD SIZE	Hole Dia.	Wt. Per 100
FP101-1/4	1/4"	5/16"	19#
FP101-5/16	5/16"	3/8"	18#
FP101-3/8	3/8"	7/16"	18#
FP101-1/2	1/2"	9/16"	17#
FP101-5/8	5/8"	11/16"	16#
FP101-3/4	3/4"	13/16"	15#

Std. Pkg. 100 Pcs.

Two-Hole Splice Plate — FP200

Std Stocking Item

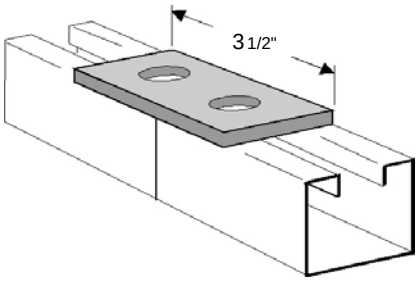

Wt./C 37 Lbs.
Std. Pkg. 50 Pcs.

Two-Hole Splice Plate — FP201

Non-Stock Item
Priced on Application

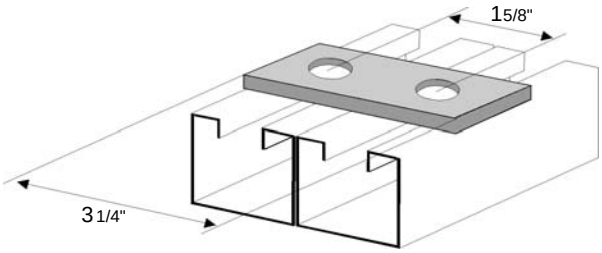

Wt./C 34 Lbs.
Std. Pkg. 50 Pcs.

Two-Hole Splice Plate — FP202

Non-Stock Item
Priced on Application

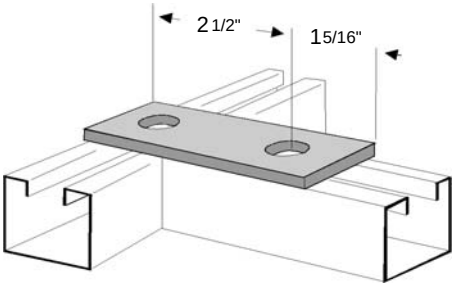

Wt./C 50 Lbs.
Std. Pkg. 25 Pcs.

Three-Hole Splice Plate — FP300

Std Stocking Item

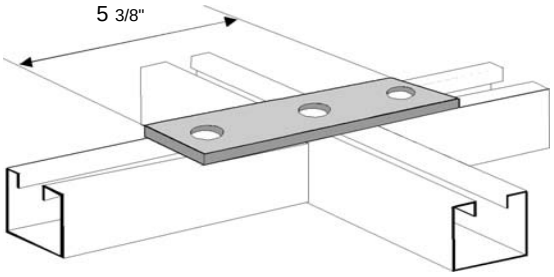

Wt./C 55 Lbs.
Std. Pkg. 25 Pcs.

FITTING SPECIFICATIONS *(unless noted)* : Hole Size-9/16" Diameter; Hole Spacing-13/16" from end and 1 7/8" on center. Width-1 5/8"; Thickness 1/4"

FINISHES AVAILABLE: Zinc Plated, Hot-Dipped Galvanized & Stainless Steel

TAYLORSTRUT

FLAT PLATE FITTINGS

Four Hole Splice Plate — FP400

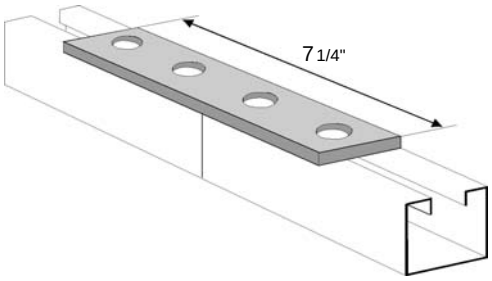

Wt./C 76 Lbs.
Std. Pkg. 25 Pcs.

Five Hole Splice Plate — FP401

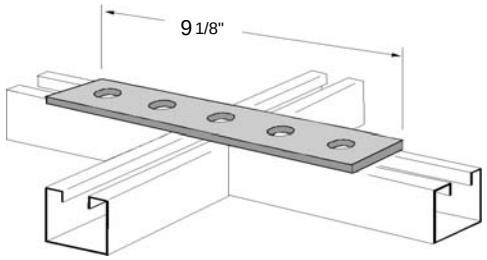

Wt./C 96 Lbs.
Std. Pkg. 20 Pcs.

Four Hole Splice Plate — FP402

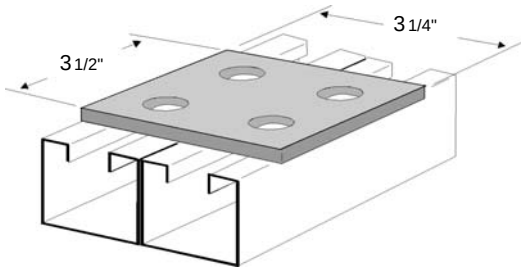

Wt./C 73 Lbs.
Std. Pkg. 25 Pcs.

Three Hole Corner Plate — FP500

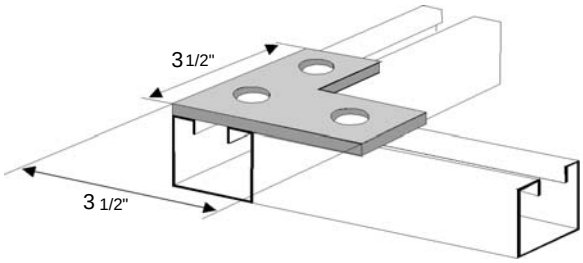

Wt./C 56 Lbs.
Std. Pkg. 25 Pcs.

Three Hole Corner Gusset — FP501

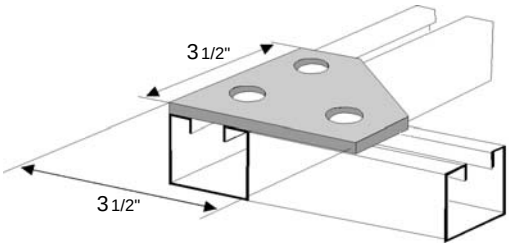

Wt./C 70 Lbs.
Std. Pkg. 25 Pcs.

Three Hole Tee Gusset — FP502

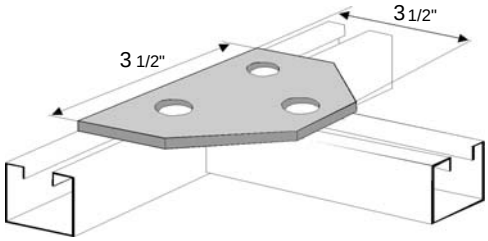

Wt./C 70 Lbs.
Std. Pkg. 25 Pcs.

FITTING SPECIFICATIONS *(unless noted)* : Hole Size-9/16" Diameter; Hole Spacing-13/16" from end and 1 7/8" on center. Width-1 5/8"; Thickness 1/4"

STANDARD FINISHES: Zinc Plated

ALSO AVAILABLE IN: HDG and STAINLESS STEEL

TAYLORSTRUT

FLAT PLATE FITTINGS

Four-Hole Tee Plate — FP600

Std Stocking Item

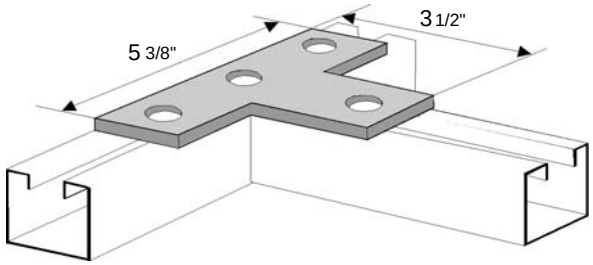

Wt./C 75 Lbs.
Std. Pkg. 20 Pcs.

Four-Hole Tee Gusset — FP601

Non-Stock Item
Priced on Application

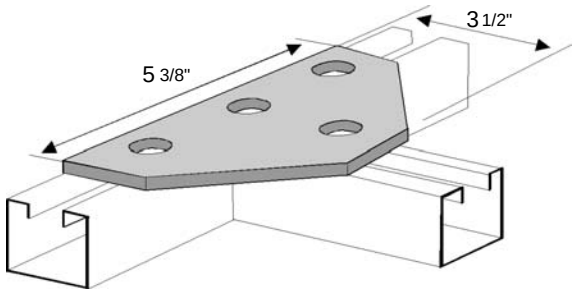

Wt./C 100 Lbs.
Std. Pkg. 25 Pcs.

Four-Hole Tee Gusset — FP602

Std Stocking Item

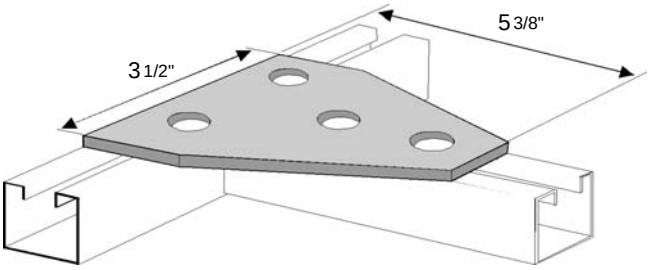

Wt./C 100 Lbs.
Std. Pkg. 20 Pcs.

Four-Hole Corner Gusset — FP603

Non-Stock Item
Priced on Application

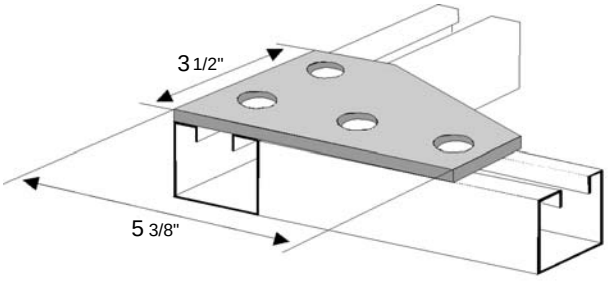

Wt./C 102 Lbs.
Std. Pkg. 25 Pcs.

Four-Hole Corner Plate — FP604

Std Stocking Item

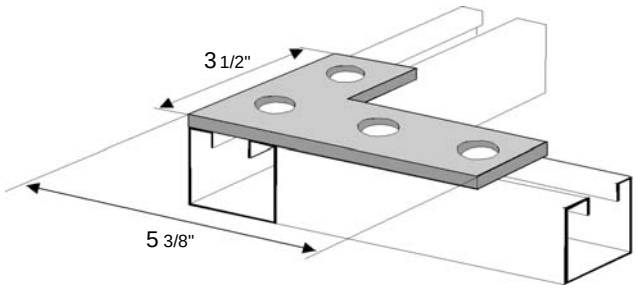

Wt./C 75 Lbs.
Std. Pkg. 25 Pcs.

Four-Hole Corner Gusset — FP605

Non-Stock Item
Priced on Application

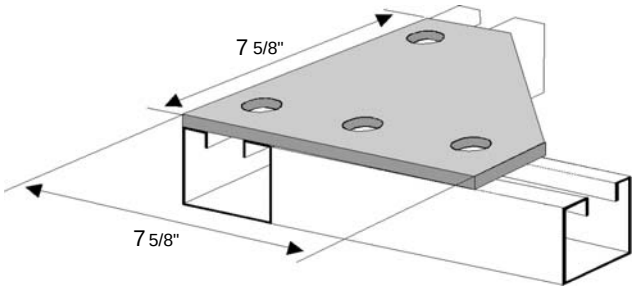

Wt./C 273 Lbs.
Std. Pkg. 10 Pcs.

FITTING SPECIFICATIONS *(unless noted)* : Hole Size-9/16" Diameter; Hole Spacing-13/16" from end and 1 7/8" on center. Width-1 5/8"; Thickness 1/4"

FINISHES AVAILABLE: Zinc Plated, Hot-Dipped Galvanized & Stainless Stee

TAYLORSTRUT

FLAT PLATE FITTINGS

Five Hole Cross Plate — FP700

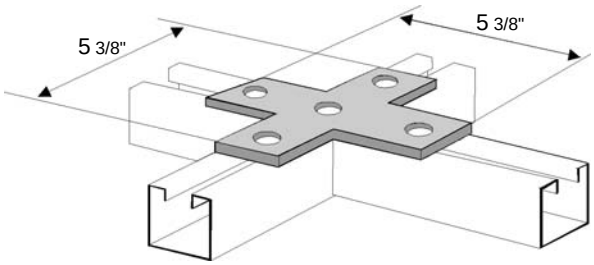

Wt./C 100 Lbs.
Std. Pkg. 10 Pcs.

Five Hole Tee Gusset — FP701

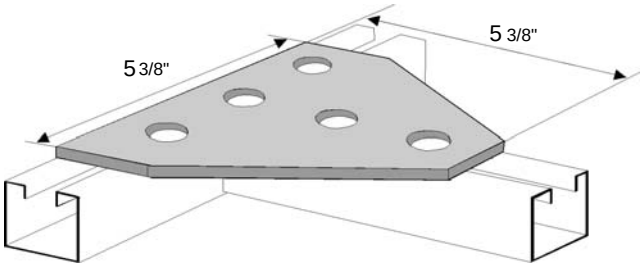

Wt./C 143 Lbs.
Std. Pkg. 20 Pcs.

Five Hole Corner Gusset — FP702

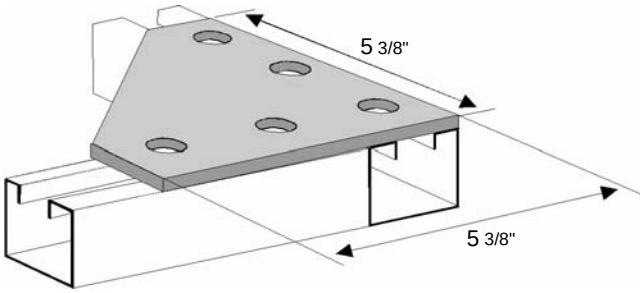

Wt./C 145 Lbs.
Std. Pkg. 20 Pcs.

Six Hole Tee Gusset — FP800

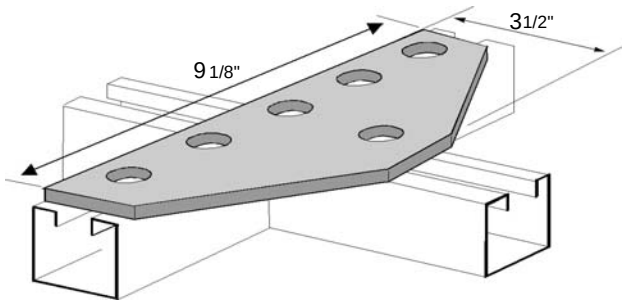

Wt./C 149 Lbs.
Std. Pkg. 20 Pcs.

Six Hole Cross Gusset — FP801

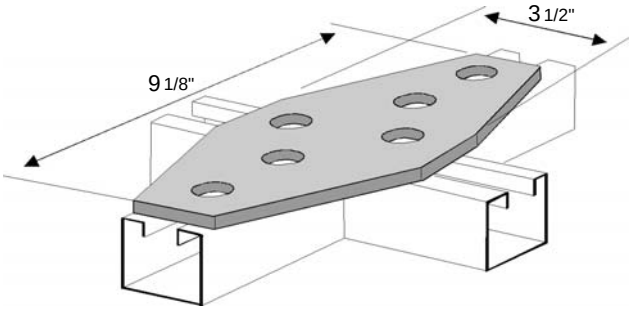

Wt./C 166 Lbs.
Std. Pkg. 20 Pcs.

Seven Hole Cross Gusset — FP900

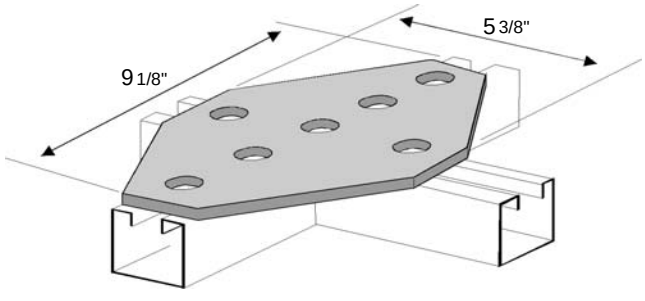

Wt./C 232 Lbs.
Std. Pkg. 15 Pcs.

FITTING SPECIFICATIONS *(unless noted)* : Hole Size-9/16" Diameter; Hole Spacing-13/16" from end and 1 7/8" on center. Width-1 5/8"; Thickness 1/4"

STANDARD FINISHES: Zinc Plated

ALSO AVAILABLE IN: HDG and STAINLESS STEEL

TAYLORSTRUT

90° ANGLE FITTINGS

One-Hole Corner Angle — AF100

Non-Stock Item
Priced on Application

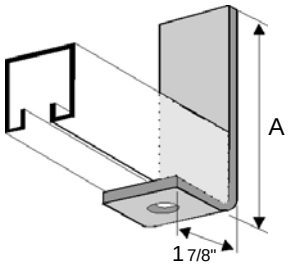

Std. Pkg. 25 Pcs.

PART No.	Dim. A	Wt. Per 100
AF100-1	3 7/8	60#
AF100-2	5 7/8	85#
AF100-3	7 7/8	107#
AF100-4	9 7/8	129#

Two-Hole Corner Angle — AF101

Non-Stock Item
Priced on Application

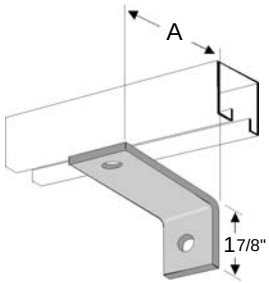

Std. Pkg. 50 Pcs.

PART No.	Dim. A	Wt. Per 100
AF101-1	3	48#
AF101-2	3 1/2	53#
AF101-3	4	60#

Two-Hole Corner Angle — AF200

Std Stocking Item

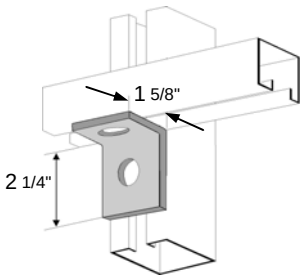

Wt./C 37 Lbs.
Std. Pkg. 50 Pcs.

Two-Hole Corner Angle — AF201

Std Stocking Item

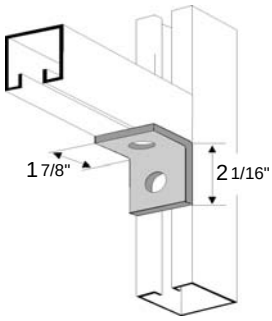

Wt./C 37 Lbs.
Std. Pkg. 50 Pcs.

Three-Hole Corner Angle — AF300

Std Stocking Item

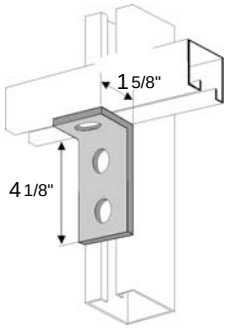

Wt./C 56 Lbs.
Std. Pkg. 25 Pcs.

Three-Hole Corner Angle — AF301

Std Stocking Item

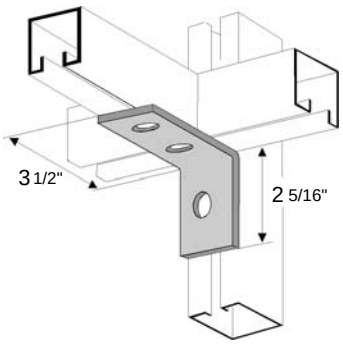

Wt./C 56 Lbs.
Std. Pkg. 25 Pcs.

FITTING SPECIFICATIONS *(unless noted)* : Hole Size-9/16" Diameter; Hole Spacing-13/16" from end and 1 7/8" on center. Width-1 5/8"; Thickness 1/4"

FINISHES AVAILABLE: Zinc Plated, Hot-Dipped Galvanized & Stainless Steel

TAYLORSTRUT

90° ANGLE FITTINGS

Three-Hole Corner Angle — AF302

Std Stocking Item

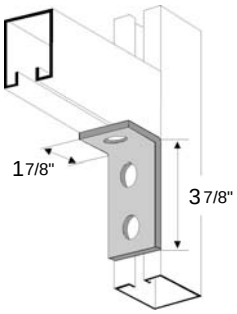

Wt./C 56 Lbs.
Std. Pkg. 25 Pcs.

Three-Hole Corner Angle — AF303

Non-Stock Item
Priced on Application

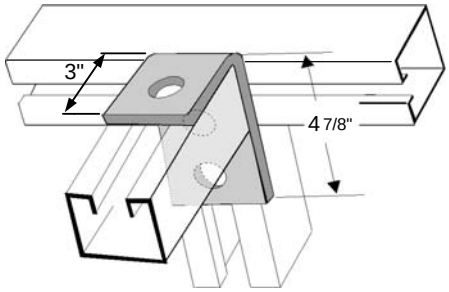

Wt./C 78 Lbs.
Std. Pkg. 25 Pcs.

Four-Hole Corner Angle — AF400

Std Stocking Item

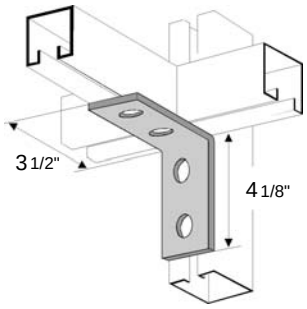

Wt./C 78 Lbs.
Std. Pkg. 20 Pcs.

Four-Hole Corner Angle — AF401

Std Stocking Item

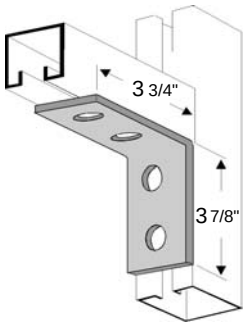

Wt./C 76 Lbs.
Std. Pkg. 20 Pcs.

Four-Hole Corner Angle — AF402

Non-Stock Item
Priced on Application

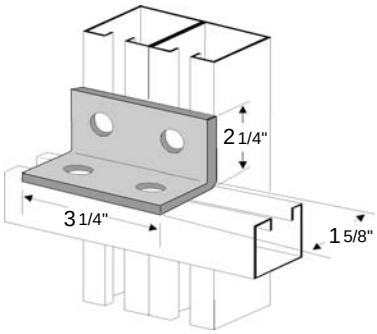

Wt./C 73 Lbs.
Std. Pkg. 20 Pcs.

Two-Hole Adjustable Corner Angle — AF210

Non-Stock Item
Priced on Application

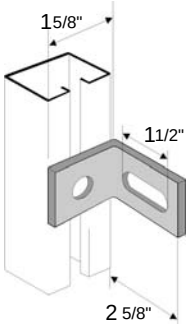

Wt./C 38 Lbs.
Std. Pkg. 25 Pcs.

FITTING SPECIFICATIONS (unless noted): Hole Size-9/16" Diameter; Hole Spacing-13/16" from end and 1 7/8" on center.
Width-1 5/8"; Thickness 1/4"

FINISHES AVAILABLE: Zinc Plated, Hot-Dipped Galvanized & Stainless Steel

TAYLORSTRUT

90° ANGLE FITTINGS

Two-Hole Adjustable Corner Angle — AF211

Non-Stock Item
Priced on Application

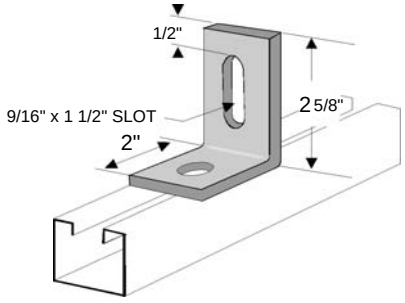

Wt./C 41 Lbs.
Std. Pkg. 25 Pcs.

Two-Hole Adjustable Corner Angle — AF212

Non-Stock Item
Priced on Application

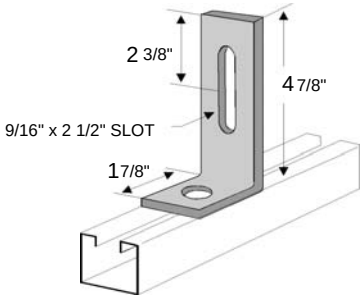

Wt./C 58 Lbs.
Std. Pkg. 25 Pcs.

Two-Hole Adjustable Corner Angle — AF213

Non-Stock Item
Priced on Application

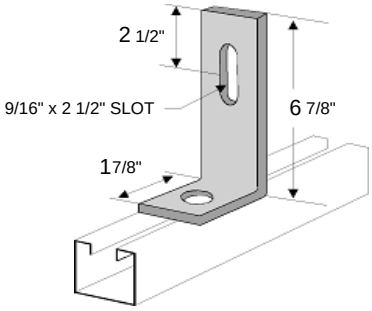

Wt./C 58 Lbs.
Std. Pkg. 25 Pcs.

Three-Hole Adjustable Corner Angle — AF214

Non-Stock Item
Priced on Application

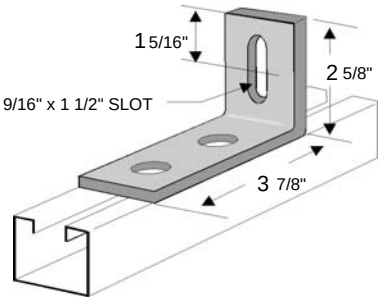

Wt./C 61 Lbs.
Std. Pkg. 25 Pcs.

Three-Hole Adjustable Corner Angle — AF215

Non-Stock Item
Priced on Application

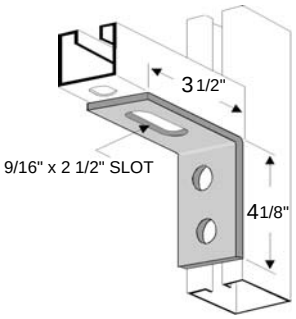

Wt./C 68 Lbs.
Std. Pkg. 20 Pcs.

Two-Hole Bus Duct Angle — AF219

Non-Stock Item
Priced on Application

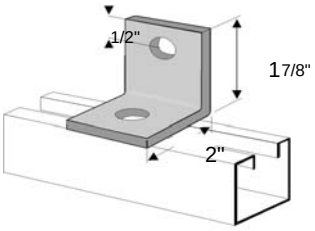

Wt./C 37 Lbs.
Std. Pkg. 25 Pcs.

FITTING SPECIFICATIONS *(unless noted)* : Hole Size-9/16" Diameter; Hole Spacing-13/16" from end and 1 7/8" on center. Width-1 5/8"; Thickness 1/4"

FINISHES AVAILABLE: Zinc Plated, Hot-Dipped Galvanized & Stainless Steel

TAYLORSTRUT

90° ANGLE FITTINGS

Three Hole Offset Bent Angle — AF310

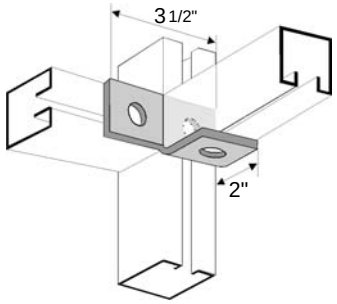

Wt./C 65 Lbs.
Std. Pkg. 25 Pcs.

Three Hole Offset Bent Angle — AF311

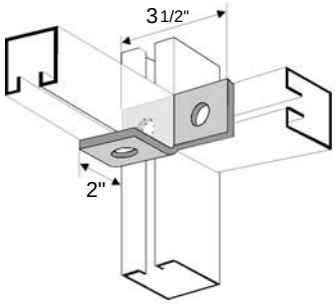

Wt./C 65 Lbs.
Std. Pkg. 25 Pcs.

Four Hole Offset Bent Angle — AF410

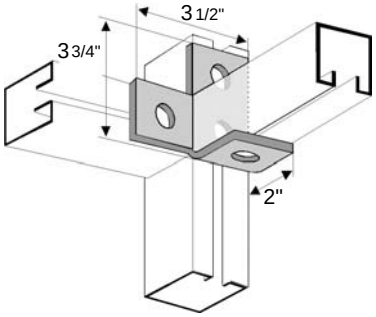

Wt./C 76 Lbs.
Std. Pkg. 20 Pcs.

Four Hole Offset Bent Angle — AF411

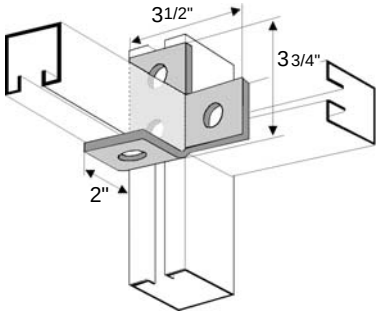

Wt./C 76 Lbs.
Std. Pkg. 20 Pcs.

Four Hole Offset Bent Tee — AF415

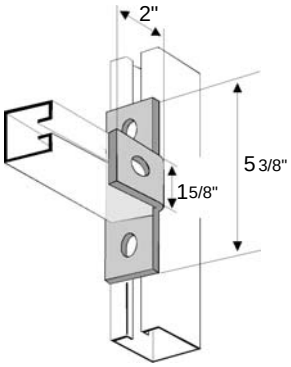

Wt./C 76 Lbs.
Std. Pkg. 20 Pcs.

Five Hole Offset Bent Tee — AF510

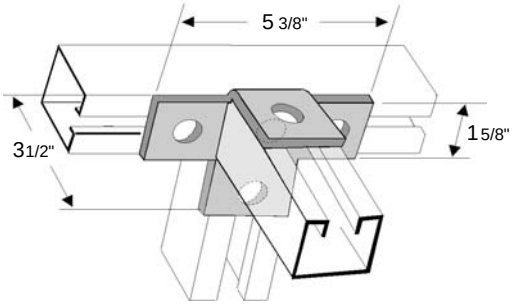

Wt./C 96 Lbs.
Std. Pkg. 10 Pcs.

FITTING SPECIFICATIONS *(unless noted)* : Hole Size-9/16" Diameter; Hole Spacing-13/16" from end and 1 7/8" on center. Width-1 5/8"; Thickness 1/4"

STANDARD FINISHES: Zinc Plating

ALSO AVAILABLE IN: HDG and STAINLESS STEEL

TAYLORSTRUT

90° ANGLE FITTINGS

Four-Hole Corner Gusset — AF420

Non-Stock Item
Priced on Application

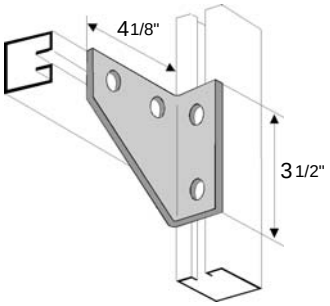

Wt./C 100 Lbs.
Std. Pkg. 20 Pcs.

Four-Hole Corner Gusset — AF421

Non-Stock Item
Priced on Application

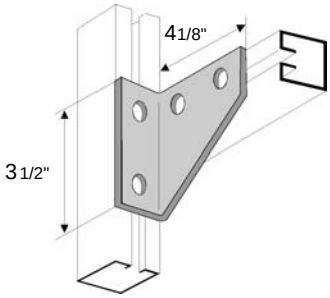

Wt./C 100 Lbs.
Std. Pkg. 20 Pcs.

Four-Hole Corner Gusset — AF422

Non-Stock Item
Priced on Application

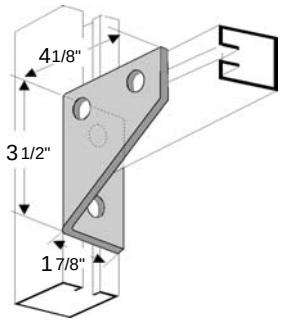

Wt./C 100 Lbs.
Std. Pkg. 20 Pcs.

Four-Hole Corner Gusset — AF423

Non-Stock Item
Priced on Application

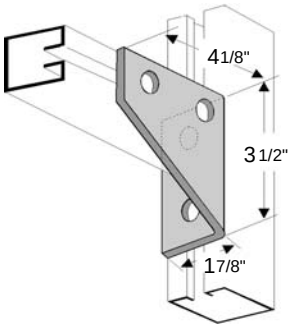

Wt./C 100 Lbs.
Std. Pkg. 25 Pcs.

Five-Hole Webbed Corner Angle — AF430

Std Stocking Item

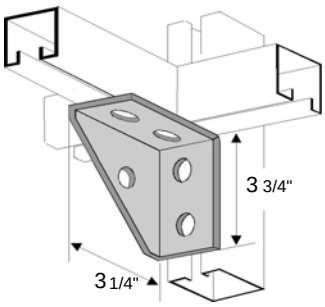

Wt./C 132 Lbs.
Std. Pkg. 10 Pcs.

Five-Hole Webbed Corner Angle — AF431

Std Stocking Item

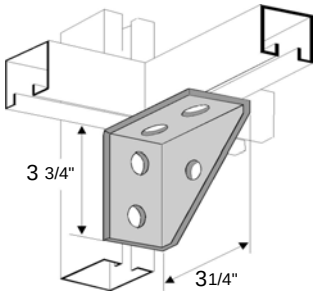

Wt./C 132 Lbs.
Std. Pkg. 10 Pcs.

FITTING SPECIFICATIONS *(unless noted)* : Hole Size-9/16" Diameter; Hole Spacing-13/16" from end and 1 7/8" on center. Width-1 5/8"; Thickness 1/4"

FINISHES AVAILABLE: Zinc Plated, Hot-Dipped Galvanized & Stainless Steel

TAYLORSTRUT

90° ANGLE FITTINGS

Three Hole Shelf Gusset Angle — AF340

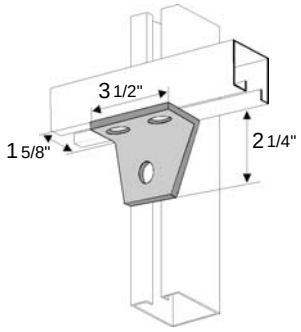

Wt./C 67 Lbs.
Std. Pkg. 20 Pcs.

Four Hole Shelf Gusset Angle — AF440

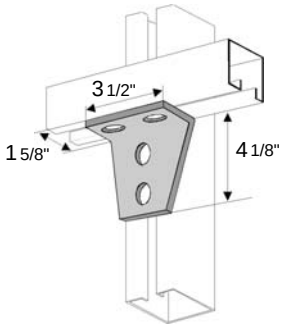

Wt./C 102 Lbs.
Std. Pkg. 20 Pcs.

Four Hole Shelf Gusset Angle — AF441

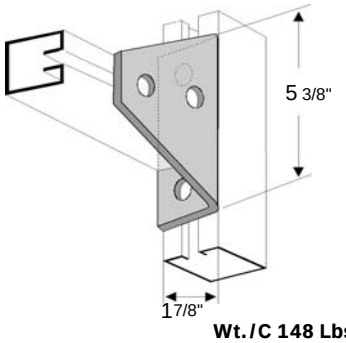

Wt./C 148 Lbs.
Std. Pkg. 20 Pcs.

Five Hole Shelf Gusset Angle — AF540

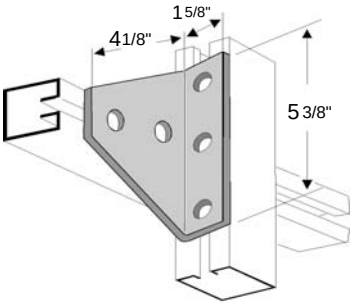

Wt./C 141 Lbs.
Std. Pkg. 20 Pcs.

Four Hole Shelf Gusset Three Way Angle — AF445

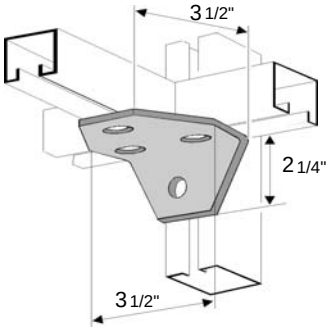

Wt./C 101 Lbs.
Std. Pkg. 20 Pcs.

Five Hole Shelf Gusset Three Way Angle — AF545

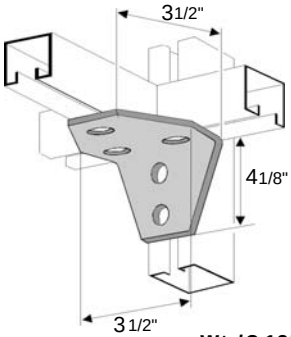

Wt./C 135 Lbs.
Std. Pkg. 15 Pcs.

FITTING SPECIFICATIONS *(unless noted)* : Hole Size-9/16" Diameter; Hole Spacing-13/16" from end and 1 7/8" on center. Width-1 5/8"; Thickness 1/4"

STANDARD FINISHES: Zinc Plating

ALSO AVAILABLE IN: HDG and STAINLESS STEEL

TAYLORSTRUT

ANGULAR FITTINGS

Two Hole Open Short Angle — AF220

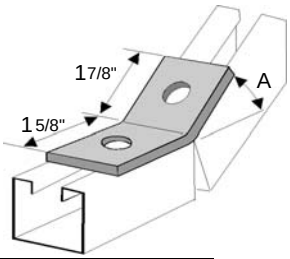

PART No.	A
AF220-1	30°
AF220-2	45°
AF220-3	60°
AF220-4	75°

Wt./C 37 Lbs.
Std. Pkg. 50 Pcs.

Two Hole Open Angle — AF221

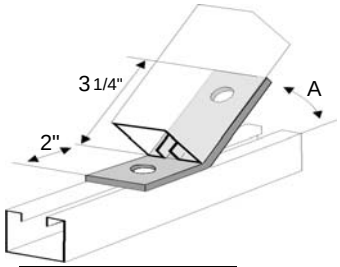

PART No.	A
AF221-1	30°
AF221-2	45°
AF221-3	60°
AF221-4	75°

Wt./C 56 Lbs.
Std. Pkg. 25 Pcs.

Four Hole Open Angle — AF425

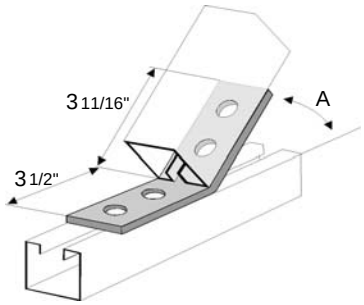

PART No.	A
AF425-1	30°
AF425-2	45°
AF425-3	60°
AF425-4	75°

Wt./C 77 Lbs.
Std. Pkg. 25 Pcs.

Two Hole Closed Angle — AF225

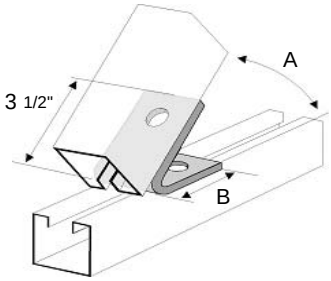

Std. Pkg. 25 Pcs.

PART No.	A	B	Wt. Per 100
AF225-1	30°	3 1/2	73 #
AF225-2	45°	2 1/2	62 #
AF225-3	60°	2 1/2	62 #
AF225-4	75°	2 1/2	62 #

Four Hole Closed Angle — AF426

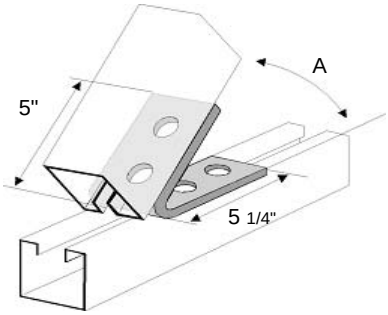

Wt./C 108 Lbs.
Std. Pkg. 25 Pcs.

PART No.	A
AF426-1	30°
AF426-2	45°
AF426-3	60°
AF426-4	75°

FITTING SPECIFICATIONS *(unless noted)* : Hole Size-9/16" Diameter; Hole Spacing-13/16" from end and 1 7/8" on center. Width-1 5/8"; Thickness 1/4"

STANDARD FINISHES: Zinc Plating

ALSO AVAILABLE IN: HDG and STAINLESS STEEL

TAYLORSTRUT

POST BASES

Post Base PB100

Non-Stock Item
Priced on Application

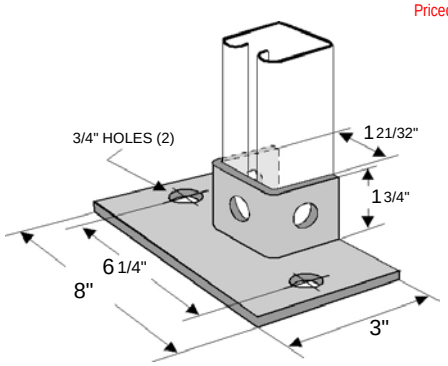

Wt./C 230 Lbs.
Std. Pkg. 10 Pcs.

Post Base PB101

Non-Stock Item
Priced on Application

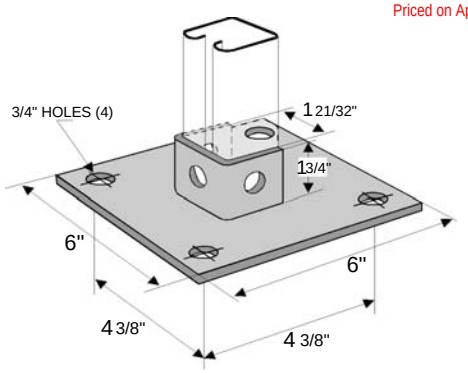

Wt./C 314 Lbs.
Std. Pkg. 10 Pcs.

Post Base PB102

Non-Stock Item
Priced on Application

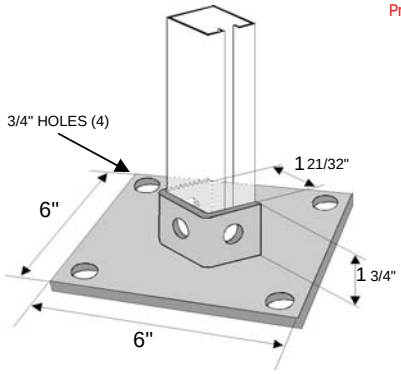

Wt./C 314 Lbs.
Std. Pkg. 10 Pcs.

Post Base PB110

Non-Stock Item
Priced on Application

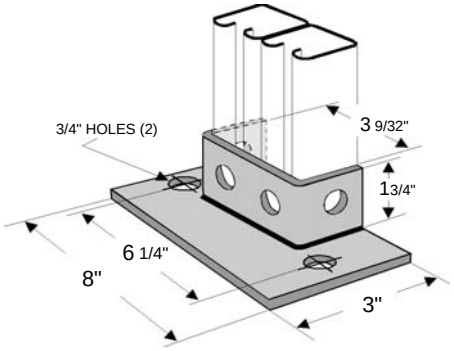

Wt./C 250 Lbs.
Std. Pkg. 10 Pcs.

Post Base PB111

Non-Stock Item
Priced on Application

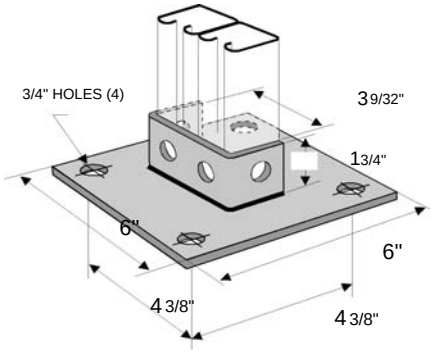

Wt./C 330 Lbs.
Std. Pkg. 10 Pcs.

Post Base PB112

Non-Stock Item
Priced on Application

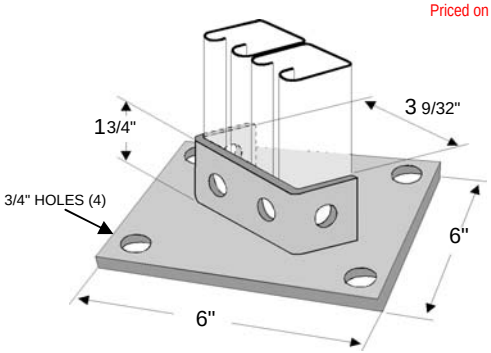

Wt./C 330 Lbs.
Std. Pkg. 10 Pcs.

FITTING SPECIFICATIONS *(unless noted)* : Hole Size-9/16" Diameter; Hole Spacing-13/16" from end and 1 7/8" on center. Width-1 5/8"; Thickness 1/4"

FINISHES AVAILABLE: Zinc Plated, Hot-Dipped Galvanized & Stainless Steel

TAYLORSTRUT

POST BASES

Post Base PB200

Non-Stock Item
Priced on Application

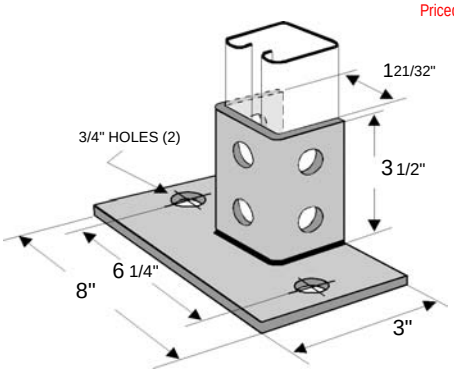

Wt./C 312 Lbs.
Std. Pkg. 5 Pcs.

Post Base PB201

Std Stocking Item

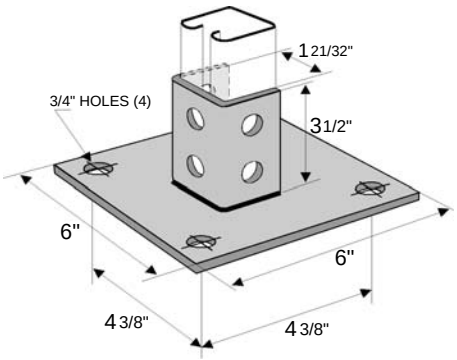

Wt./C 392 Lbs.
Std. Pkg. 5 Pcs.

Post Base PB202

Std Stocking Item

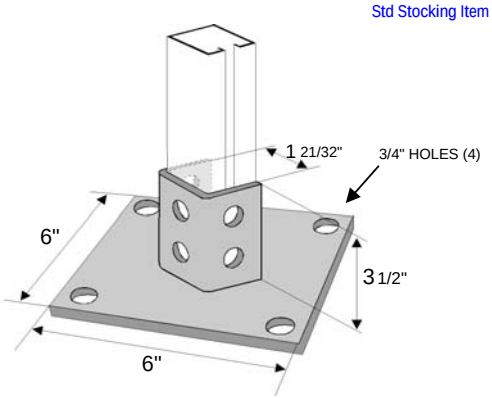

Wt./C 392 Lbs.
Std. Pkg. 5 Pcs.

Post Base PB210

Non-Stock Item
Priced on Application

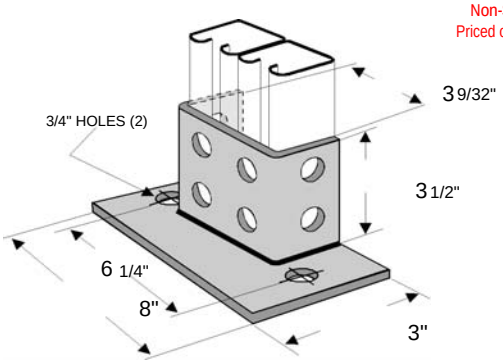

Wt./C 320 Lbs.
Std. Pkg. 5 Pcs.

Post Base PB211

Std Stocking Item

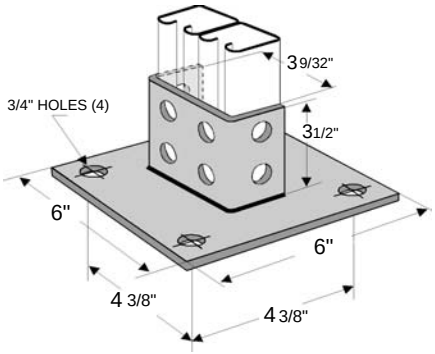

Wt./C 400 Lbs.
Std. Pkg. 5 Pcs.

Post Base PB212

Non-Stock Item
Priced on Application

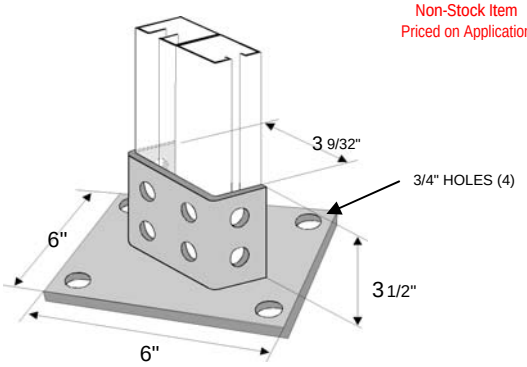

Wt./C 400 Lbs.
Std. Pkg. 5 Pcs.

FITTING SPECIFICATIONS *(unless noted)* : Hole Size-9/16" Diameter; Hole Spacing-13/16" from end and 1 7/8" on center. Width-1 5/8"; Thickness 1/4"

FINISHES AVAILABLE: Zinc Plated, Hot-Dipped Galvanized & Stainless Steel

TAYLORSTRUT

"U" FITTINGS

Two-Hole Splice Plate — UF200

Non-Stock Item
Priced on Application

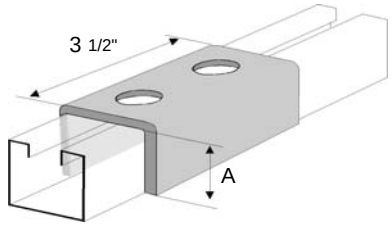

PART No.	A	Wt. Per 100	Std. Pkg.
UF200-1	13/16"	84 #	25
UF200-2	1"	91 #	25
UF200-3	1 3/8"	110 #	25
UF200-4	1 5/8"	121 #	25
UF200-5	2"	141 #	20
UF200-6	2 7/16"	162 #	20
UF200-7	3 1/4"	202 #	20

Three-Hole Splice Plate — UF300

Non-Stock Item
Priced on Application

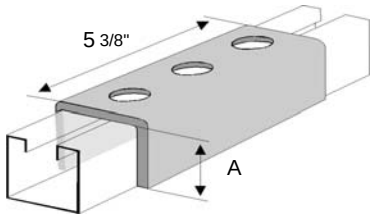

PART No.	A	Wt. Per 100	Std. Pkg.
UF300-1	13/16"	126 #	25
UF300-2	1"	140 #	25
UF300-3	1 3/8"	169 #	25
UF300-4	1 5/8"	186 #	25
UF300-5	2"	217 #	20
UF300-6	2 7/16"	250 #	20
UF300-7	3 1/4"	312 #	20

Four-Hole "U" Splice — UF400

Stocking Item
(UF400-4)

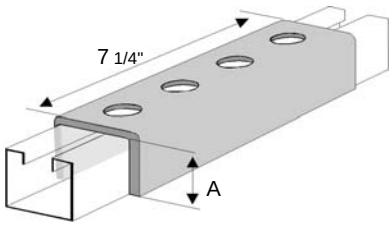

PART No.	A	Wt. Per 100	Std. Pkg.
UF400-1	13/16"	170 #	15
UF400-2	1"	189 #	15
UF400-3	1 3/8"	228 #	15
UF400-4	1 5/8"	250 #	15
UF400-5	2"	292 #	10
UF400-6	2 7/16"	337 #	10
UF400-7	3 1/4"	420 #	10

Three-Hole "U" Support — UF310

Stocking Item
(UF310-4 with 5 holes)

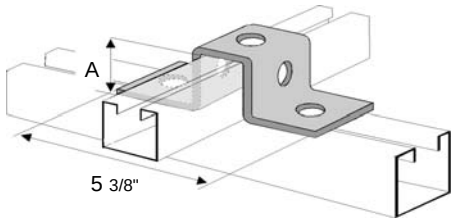

PART No.	A	Wt. Per 100
UF310-2	1"	75 #
UF310-3	1 3/8"	84 #
UF310-4	1 5/8"	90 #
UF310-5	2"	99 #
UF310-6	2 7/16"	108 #
UF310-7	3 1/4"	126 #

Std. Pkg. 25 Pcs.

Three-Hole Offset "U" Support — UF315

Non-Stock Item
Priced on Application

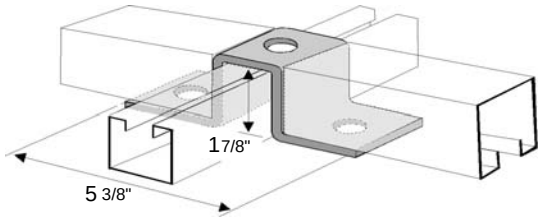

Wt./C 89 Lbs.
Std. Pkg. 25 Pcs.

Five-Hole "U" Support — UF500

Non-Stock Item
Priced on Application

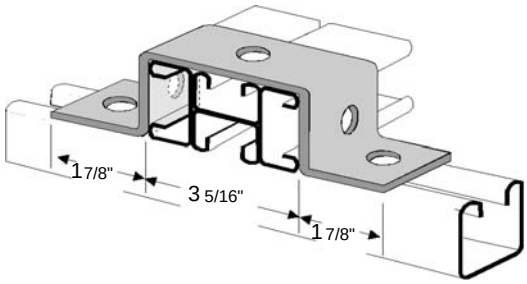

Wt./C 106 Lbs.
Std. Pkg. 10 Pcs.

FITTING SPECIFICATIONS (unless noted): Hole Size-9/16" Diameter; Hole Spacing-13/16" from end and 1 7/8" on center. Width-1 1/2"; Thickness 1/4"

FINISHES AVAILABLE: Zinc Plated, Hot-Dipped Galvanized & Stainless Steel

TAYLORSTRUT

"U" FITTINGS

Six-Hole "U" Support — UF600

Non-Stock Item
Priced on Application

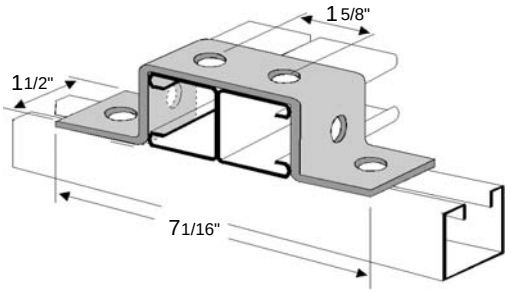

Wt./C 105 Lbs.
Std. Pkg. 10 Pcs.

Two-Hole Clevis — UF210

Non-Stock Item
Priced on Application

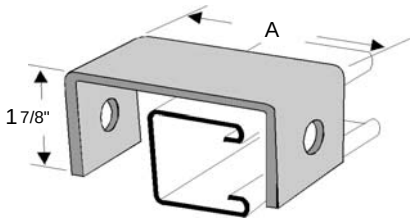

Std. Pkg. 20 Pcs.

PART No.	A	Wt. Per 100
UF210-1	4"	89 #
UF210-2	5"	93 #
UF210-3	6"	106 #
UF210-4	7"	118 #
UF210-5	8"	132 #

Four-Hole Clevis — UF410

Non-Stock Item
Priced on Application

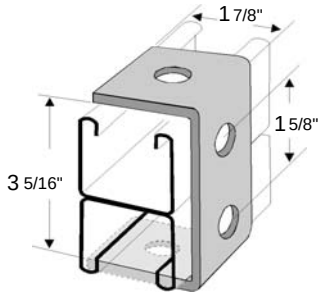

Wt./C 71 Lbs.
Std. Pkg. 20 Pcs.

Three-Hole Suspension Clevis — UF330

Non-Stock Item
Priced on Application

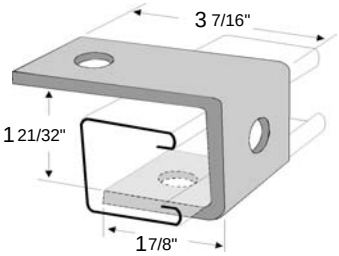

Wt./C 75 Lbs.
Std. Pkg. 20 Pcs.

Three-Hole Cup Support — UF331

Non-Stock Item
Priced on Application

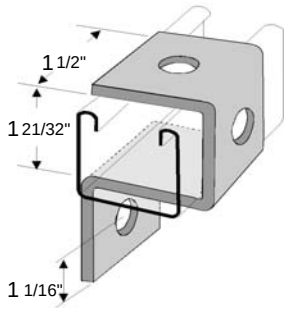

Wt./C 73 Lbs.
Std. Pkg. 20 Pcs.

FITTING SPECIFICATIONS *(unless noted)* : Hole Size-9/16" Diameter; Hole Spacing-13/16" from end and 1 7/8" on center. Width-1 1/2"; Thickness 1/4"

FINISHES AVAILABLE: Zinc Plated, Hot-Dipped Galvanized & Stainless Steel

TAYLORSTRUT

WING FITTINGS

Three-Hole Single Wing Connection — WF300

Non-Stock Item
Priced on Application

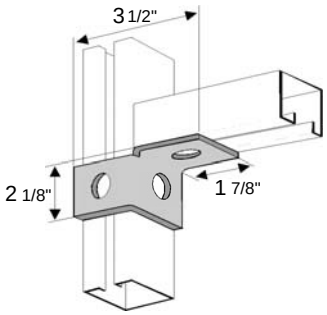

Wt./C 54 Lbs.
Std. Pkg. 20 Pcs.

Three-Hole Single Wing Connection — WF301

Non-Stock Item
Priced on Application

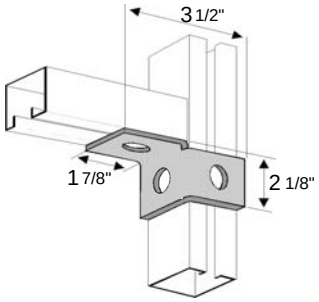

Wt./C 54 Lbs.
Std. Pkg. 20 Pcs.

Four-Hole Single Wing Connection — WF400

Non-Stock Item
Priced on Application

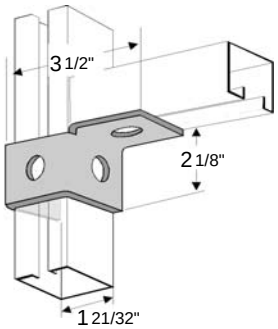

Wt./C 77 Lbs.
Std. Pkg. 10 Pcs.

Four-Hole Single Wing Connection — WF401

Non-Stock Item
Priced on Application

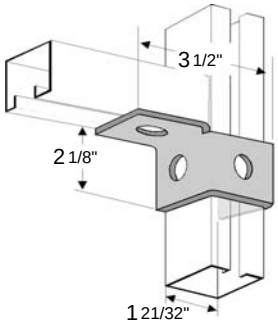

Wt./C 77 Lbs.
Std. Pkg. 10 Pcs.

Five-Hole Single Wing Connection — WF500

Non-Stock Item
Priced on Application

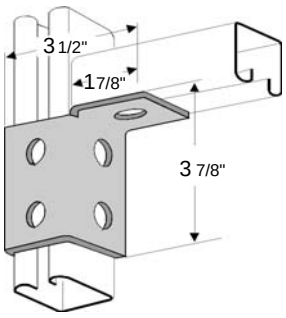

Wt./C 100 Lbs.
Std. Pkg. 20 Pcs.

Five-Hole Single Wing Connection — WF501

Non-Stock Item
Priced on Application

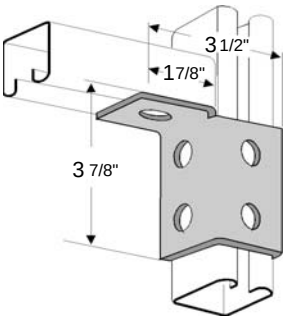

Wt./C 100 Lbs.
Std. Pkg. 20 Pcs.

FITTING SPECIFICATIONS *(unless noted)* : Hole Size-9/16" Diameter; Hole Spacing-13/16" from end and 1 7/8" on center. Width-1 5/8"; Thickness 1/4"

FINISHES AVAILABLE: Zinc Plated, Hot-Dipped Galvanized & Stainless Steel

TAYLORSTRUT

WING FITTINGS

Six Hole Single Corner Connection — WF600

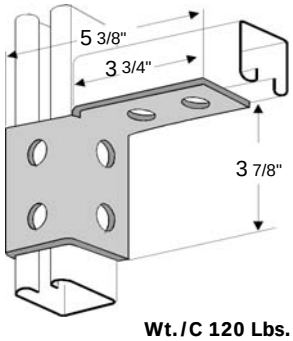

Wt./C 120 Lbs.
Std. Pkg. 20 Pcs.

Six Hole Single Corner Connection — WF601

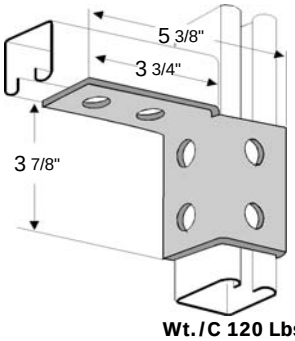

Wt./C 120 Lbs.
Std. Pkg. 20 Pcs.

Four Hole Double Corner Connection — WF405

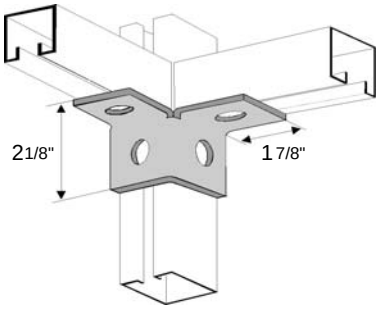

Wt./C 71 Lbs.
Std. Pkg. 20 Pcs.

Six Hole Double Corner Connection — WF605

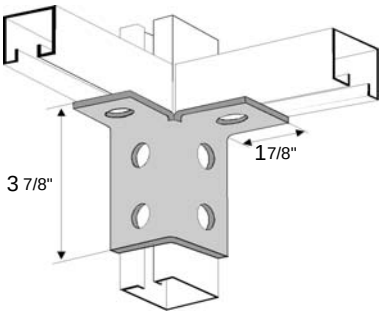

Wt./C 110 Lbs.
Std. Pkg. 20 Pcs.

Eight Hole Double Corner Connection — WF805

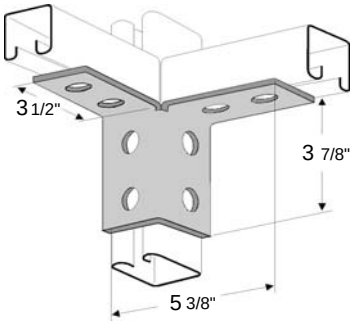

Wt./C 152 Lbs.
Std. Pkg. 10 Pcs.

Five Hole Double Wing Connection — WF510

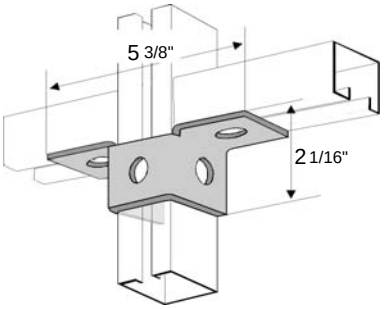

Wt./C 95 Lbs.
Std. Pkg. 10 Pcs.

FITTING SPECIFICATIONS *(unless noted)* : Hole Size-9/16" Diameter; Hole Spacing-13/16" from end and 1 7/8" on center. Width-1 5/8"; Thickness 1/4"

STANDARD FINISHES: Zinc Plated

ALSO AVAILABLE IN: HDG and STAINLESS STEEL

TAYLORSTRUT

"Z" FITTINGS

Two-Hole "Z" Support — ZF201

Non-Stock Item
Priced on Application

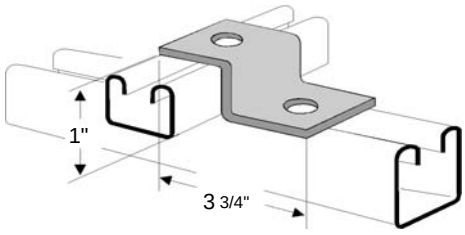

Wt./C 44 Lbs.
Std. Pkg. 25 Pcs.

Two-Hole "Z" Support — ZF202

Non-Stock Item
Priced on Application

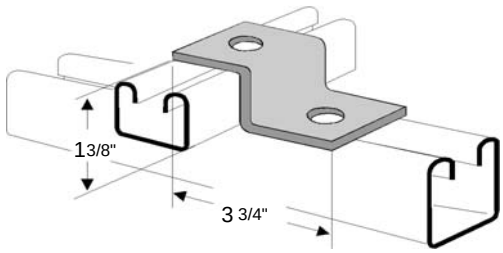

Wt./C 51 Lbs.
Std. Pkg. 25 Pcs.

Three-Hole "Z" Support — ZF203

Non-Stock Item
Priced on Application

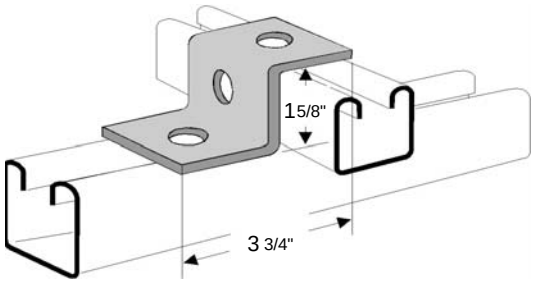

Wt./C 51 Lbs.
Std. Pkg. 25 Pcs.

Two-Hole "Z" Support — ZF204

Non-Stock Item
Priced on Application

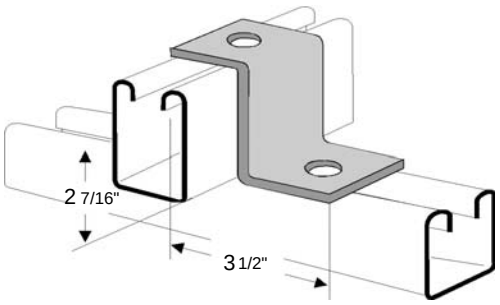

Wt./C 63 Lbs.
Std. Pkg. 25 Pcs.

Three-Hole "Z" Support — ZF205

Non-Stock Item
Priced on Application

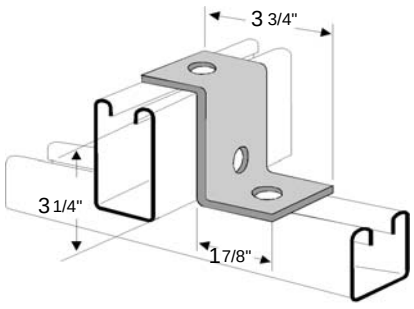

Wt./C 70 Lbs.
Std. Pkg. 25 Pcs.

Two-Hole "Z" Support — ZF206

Non-Stock Item
Priced on Application

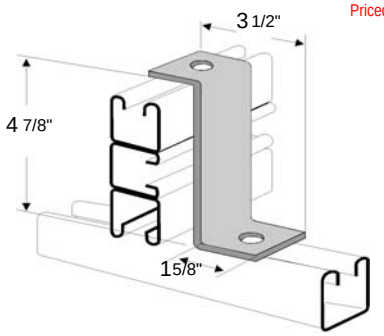

Wt./C 90 Lbs.
Std. Pkg. 25 Pcs.

FITTING SPECIFICATIONS (unless noted): Hole Size-9/16" Diameter; Hole Spacing-13/16" from end and 1 7/8" on center. Width-1 1/2"; Thickness 1/4"

FINISHES AVAILABLE: Zinc Plated, Hot-Dipped Galvanized & Stainless Steel

TAYLORSTRUT

WING FITTINGS

Eight Hole Double Wing Connection — WF810

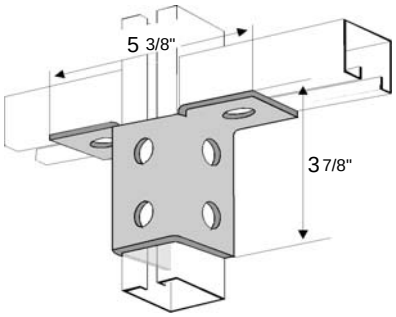

Wt./C 156 Lbs.
Std. Pkg. 20 Pcs.

Ten Hole Double Wing Connection — WF1010

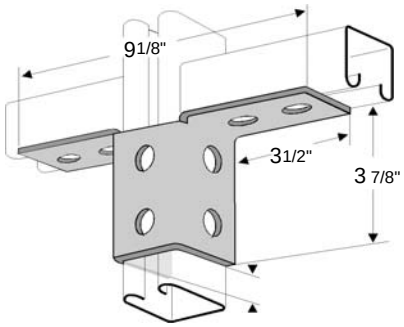

Wt./C 185 Lbs.
Std. Pkg. 10 Pcs.

Six Hole Triple Wing Connection — WF620

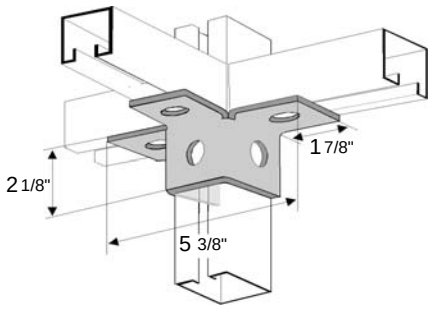

Wt./C 110 Lbs.
Std. Pkg. 20 Pcs.

Nine Hole Triple Wing Connection — WF920

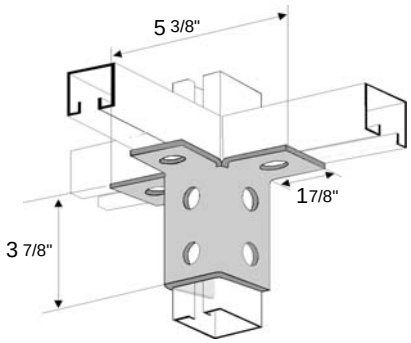

Wt./C 177 Lbs.
Std. Pkg. 10 Pcs.

Eight Hole Double Corner Gussetted Connection — WF830

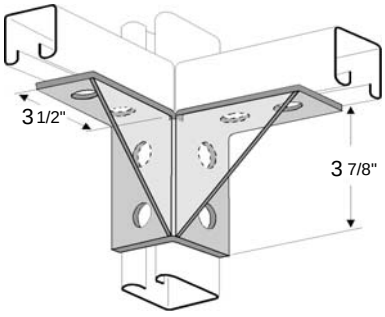

Wt./C 196 Lbs.
Std. Pkg. 5 Pcs.

Ten Hole Double Wing Gussetted Connection — WF1030

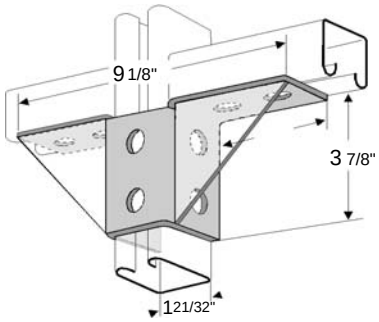

Wt./C 240 Lbs.
Std. Pkg. 5 Pcs.

FITTING SPECIFICATIONS *(unless noted)* : Hole Size-9/16" Diameter; Hole Spacing-13/16" from end and 1 7/8" on center. Width-1 5/8"; Thickness 1/4"

STANDARD FINISHES: Zinc Plated

ALSO AVAILABLE IN: HDG and STAINLESS STEEL

TAYLORSTRUT

"Z" FITTINGS

Two Hole Offset "Z" Support — ZF210

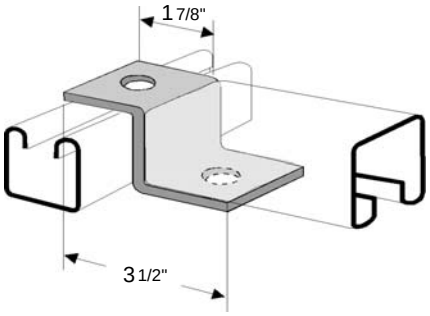

Wt./C 55 Lbs.
Std. Pkg. 25 Pcs.

Two Hole "Z" Bus Duct Connection — ZF220

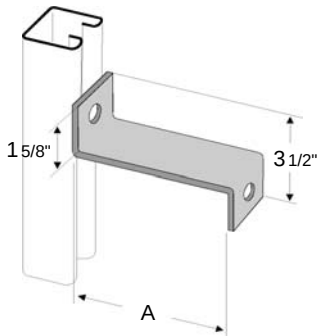

PART No.	A	Wt. Per 100	Std. Pkg.
ZF220-1	2 5/32"	62 #	25
ZF220-2	3 17/32"	78 #	20
ZF220-3	4 1/2"	89 #	20

Two Hole "Z" Support — ZF221

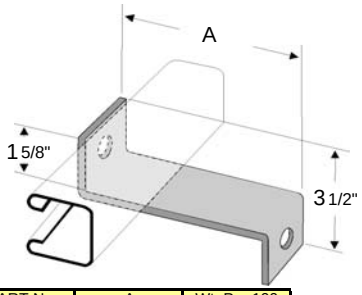

PART No.	A	Wt. Per 100
ZF221-1	4"	77 #
ZF221-2	5"	95 #
ZF221-3	6"	98 #
ZF221-4	7"	105 #
ZF221-5	8"	120 #

Std. Pkg. 20 Pcs.

Three Hole Sheath Corner Connection — ZF300

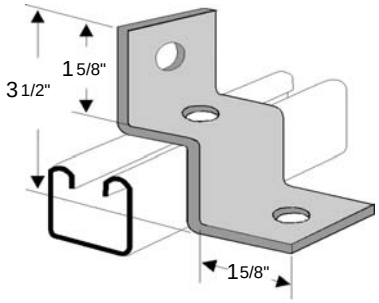

Wt./C 68 Lbs.
Std. Pkg. 20 Pcs.

Tapped "Z" Support — ZF230

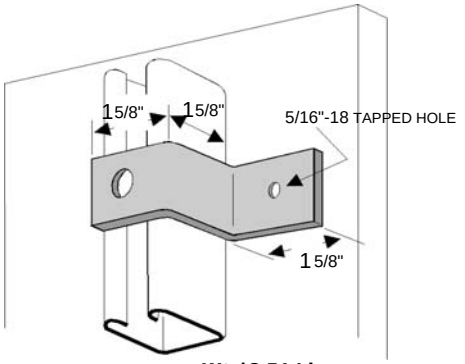

Wt./C 51 Lbs.
Std. Pkg. 25 Pcs.

Tapped "Z" Support — ZF231

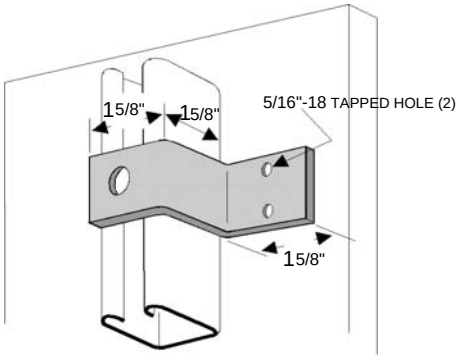

Wt./C 50 Lbs.
Std. Pkg. 25 Pcs.

FITTING SPECIFICATIONS *(unless noted)* : Hole Size-9/16" Diameter; Hole Spacing-13/16" from end and 1 7/8" on center. Width-1 1/2"; Thickness 1/4"

STANDARD FINISHES: Zinc Plating

ALSO AVAILABLE IN: HDG and STAINLESS STEEL

Tapped Corner Connection — ZF330

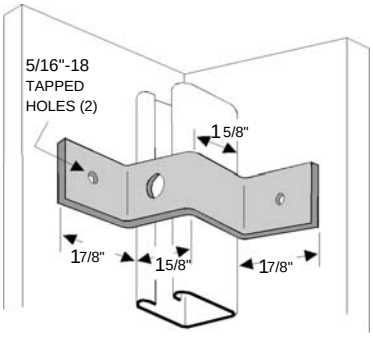

Wt./C 71 Lbs.
Std. Pkg. 20 Pcs.

Tapped Corner Connection — ZF331

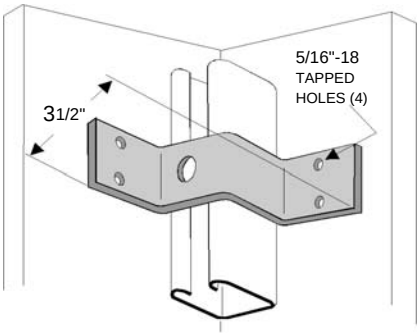

Wt./C 68 Lbs.
Std. Pkg. 20 Pcs.

FITTING SPECIFICATIONS *(unless noted)* : Hole Size-9/16" Diameter; Hole Spacing-13/16" from end and 1 7/8" on center. Width-1 1/2"; Thickness 1/4"

STANDARD FINISHES: Zinc Plating

ALSO AVAILABLE IN: HDG and STAINLESS STEEL

TAYLORSTRUT

BEAM CLAMPS

Beam Clamp BC460

Non-Stock Item
Priced on Application

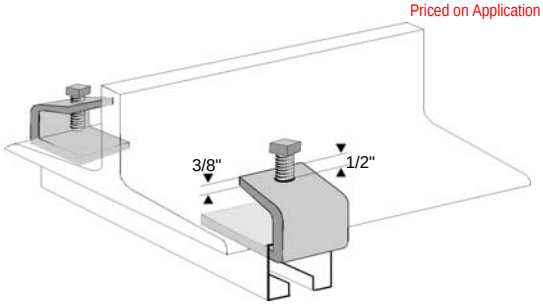

Maximum flange thickness 1"
Design Load 1000 Lbs. (12Ga. Strut) when used in pairs.

1/2"-13 Setscrew included.
3/8"x 1 1/4" Material

Wt./C 62 Lbs.

Sold in pieces

Std. Pkg. 25 Pcs.

Beam Clamp BC470

Stocking Item

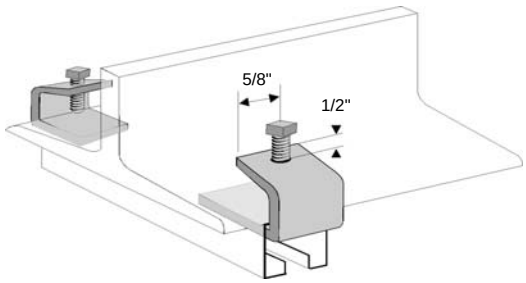

Maximum flange thickness 3/4"
Design Load 600 Lbs. (12Ga. Strut) when used in pairs.

3/8" - 16 Setscrew included.
1/4" x 1 1/4" Material

Wt./C 40 Lbs.

Sold in pieces

Std. Pkg. 50 Pcs.

Beam Clamp BC480

Stocking Item

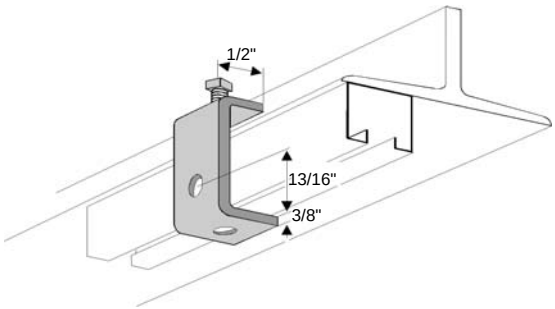

Design Load 800 Lbs.(12Ga. Strut) when used in pairs.

1/2"-13 Setscrew included.
3/8" x 1 1/2" Material

Wt./C 95 Lbs.

Sold in pieces

Std. Pkg. 25 Pcs.

"Z" Beam Clamp BC490

Non-Stock Item
Priced on Application

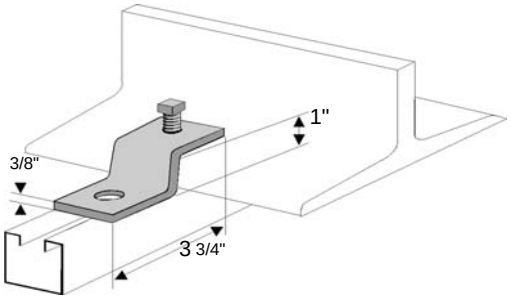

Design Load 600 Lbs.(12Ga. Strut) when used in pairs.

1/2"-13 Setscrew included.
3/8" x 1 1/2" Material

Wt./C 70 Lbs.

Sold in pieces

Std. Pkg. 25 Pcs.

"Z" Beam Clamp BC491

Stocking Item

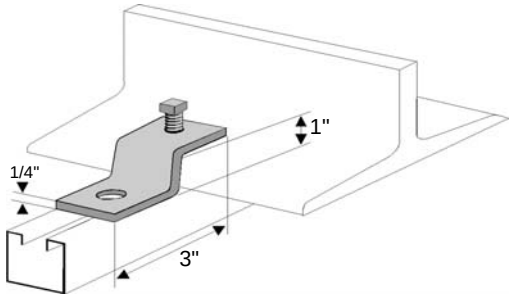

Design Load 500 Lbs.(12Ga. Strut) when used in pairs.

1/2"-13 Setscrew included.
1/4" x 1 3/4" Material

Wt./C 44 Lbs.

Sold in pieces

Std. Pkg. 25 Pcs.

Window Beam Clamp BC500

Stocking Item

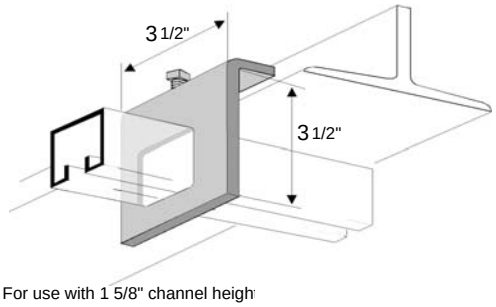

For use with 1 5/8" channel heigh
Design Load 800 Lbs.(12Ga. Strut) when used in pairs.

1/2"-13 Setscrew included.

Wt./C 112 Lbs.

Sold in pieces

Std. Pkg. 25 Pcs.

FITTING SPECIFICATIONS (unless noted): Hole Size-9/16" Diameter; Hole Spacing-13/16" from end and 1 7/8" on center. Width-1 5/8"; Thickness 1/4"

FINISHES AVAILABLE: Zinc Plated, Hot-Dipped Galvanized & Stainless Steel

TAYLORSTRUT

BEAM CLAMPS

Beam Clamp — BC515

Std Stocking Item

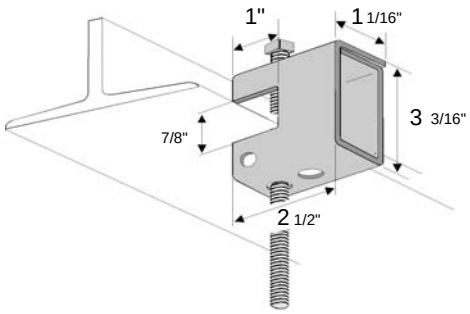

Maximum flange thickness 13/16"
Design Load 750 Lbs. (12Ga. Strut)
Wrapped seam welded.
1/2"-13 Setscrew and Square Nut included.

1/8" Material

Wt./C 80 Lbs.
Std. Pkg. 25 Pcs.

Beam Clamp & Swing Connector Assembly — BC516A

Non-Stock Item
Priced on Application

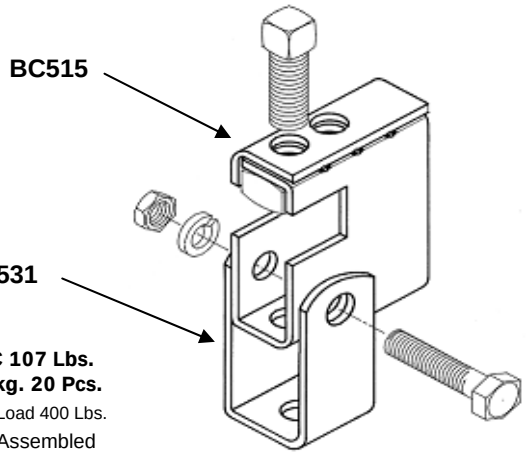

Wt./C 107 Lbs.
Std. Pkg. 20 Pcs.
Design Load 400 Lbs.
Supplied Assembled

Beam Clamp Safety Strap — BC520

Non-Stock Item
Priced on Application

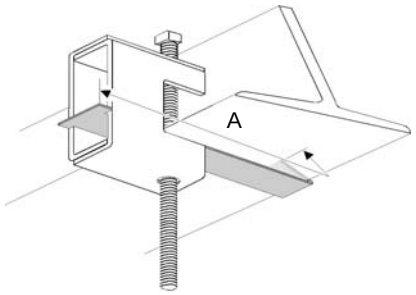

SIZE	A
BC520-6	8"
BC520-6A	9"
BC520-9	11"
BC520-9A	12"
BC520-12A	15"
BC520-16	20"
BC520-20	23"

Std. Pkg. BULK

14 Ga. X 1 1/4" Pre-Galvanized Material

Beam Clamp Swing Connector — BC531

Non-Stock Item
Priced on Application

Allows for angular adjustment when using BC510 and BC512 beam clamps.

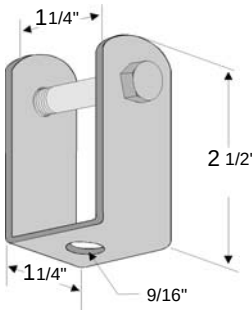

Design Load 400 Lbs.

1/8" Material

3/8"-16 Capscrew, Lockwasher, and Nut included.

Wt./C 27 Lbs.
Std. Pkg. 25 Pcs.

Beam Clamp — BC540

Non-Stock Item
Priced on Application

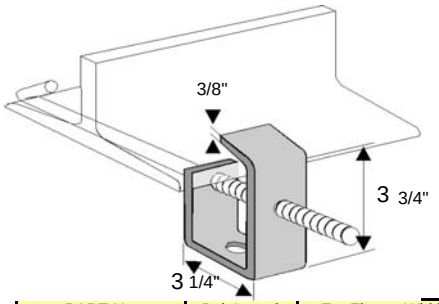

PART No.	Bolt Length	For Flange Width	Wt. Per 100
BC540-1	11"	4"- 9"	240#
BC540-2	19 1/2"	10" - 17"	300#

Maximum Load 800#
Std. Pkg. BULK

Includes: 1 pc. Beam Clamp
1 pc. J Hook
2 pc 1/2"-13 Hex Nuts

Beam Clamp-Single Strut — BC890

Std Stocking Item

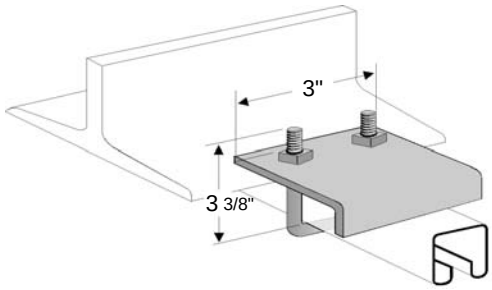

For use with 13/16" to 1 5/8" high channel

Sold in Pieces

Design Load 1200 Lbs.(12Ga. Strut) when used in pairs.

3/8"-16 Square "U" Bolt and Nuts included.

Recommended Torque: 150 in-lbs. (16.9 N*m)

Wt./C 83 Lbs.
Std. Pkg. 25 Pcs.

FITTING SPECIFICATIONS *(unless noted)* : Hole Size-9/16" Diameter; Hole Spacing-13/16" from end and 1 7/8" on center. Width-1 5/8"; Thickness 1/4"

FINISHES AVAILABLE: Zinc Plated, Hot-Dipped Galvanized & Stainless Steel

TAYLORSTRUT

BEAM CLAMPS

Beam Clamp-Double Strut — BC891

Std Stocking Item

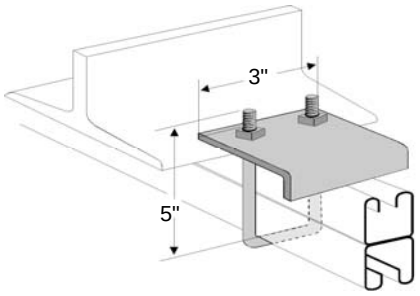

3/8"-16 Square "U" Bolt and Nuts included
For use with 1 5/8" to 3 1/4" high channe
Design Load 1200 Lbs.(12Ga. Strut) when used in pairs
Recommended Torque:
150 in-lbs. (16.9 N*m)

Sold in Pieces

Wt./C 92 Lbs.
Std. Pkg. 25 Pcs.

Beam Clamp — BC900

Non-Stock Item
Priced on Application

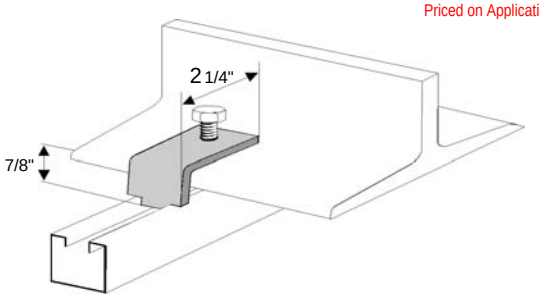

Design Load 1000 Lbs. (12Ga. Strut)
when used in pairs.

Sold in pieces

Wt./C 26 Lbs.
Std. Pkg. 50 Pcs.

Beam Clamp — BC700

Non-Stock Item
Priced on Application

1/2" - 13 Setcrew Included

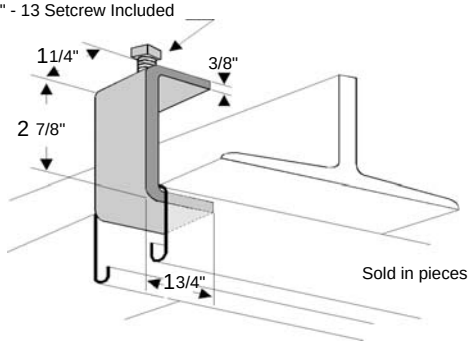

Sold in pieces

Design Load 1000 Lbs. (12Ga. Strut)
when used in pairs.

Wt./C 80 Lbs.
Std. Pkg. 25 Pcs.

FITTING SPECIFICATIONS *(unless noted)* : Hole Size-9/16" Diameter; Hole Spacing-13/16" from end and 1 7/8" on center. Width-1 5/8"; Thickness 1/4"

FINISHES AVAILABLE: Zinc Plated, Hot-Dipped Galvanized & Stainless Steel

TAYLORSTRUT

MISCELLANEOUS FITTINGS

Two-Hole 45° Knee Brace — MF100

Non Stock Item
Priced on Application

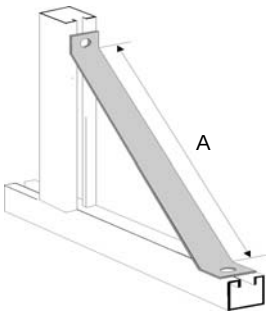

Std. Pkg. BULK

PART No.	Dim. A	Wt. Per 100
MF100-1	8 1/2"	125 #
MF100-2	12"	162 #
MF100-3	17"	216 #
MF100-4	25"	300 #
MF100-5	36"	418 #

Wall Ladder Bracket — MF110

Non Stock Item
Priced on Application

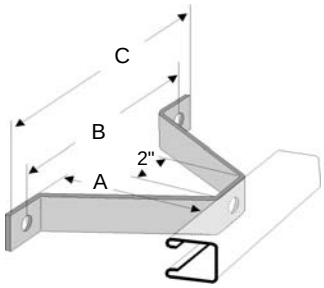

Std. Pkg. BULK

PART No.	Dim. A	Dim. B	Dim. C	Wt. Per 100
MF110-1	2 3/8"	6"	7 1/2"	110 #
MF110-2	4 3/8"	8"	9 1/2"	164 #
MF110-3	6 3/8"	10"	11 1/2"	200 #
MF110-4	8 3/8"	12"	13 1/2"	253 #
MF110-5	10 3/8"	14"	15 1/2"	318 #

Series Ladder Rungs — MF120

Non Stock Item
Priced on Application

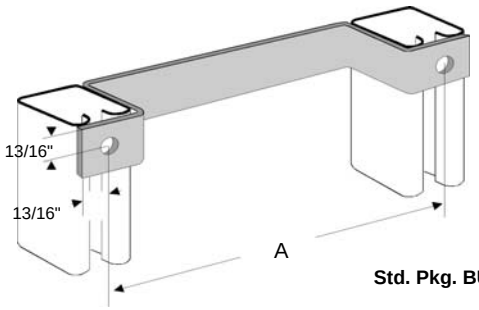

Std. Pkg. BULK

PART No.	Dim. A	Wt. Per 100
MF120-1	12"	176 #
MF120-2	15"	202 #
MF120-3	18"	234 #

Pipe Support Bracket — MF130 / MF131

Non Stock Item
Priced on Application

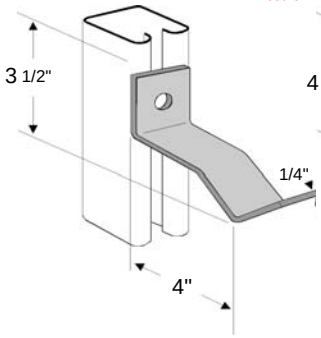

MF130
Wt./C 88 Lbs.
Std. Pkg. 20 Pcs.

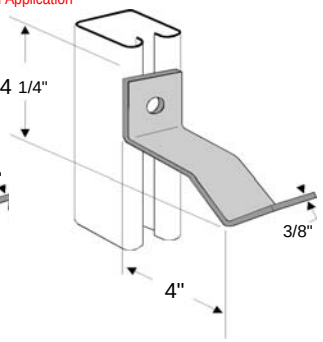

MF131
Wt./C 132 Lbs.
Std. Pkg. 20 Pcs.

Single Channel Bracket — SB120

Std Stocking Item

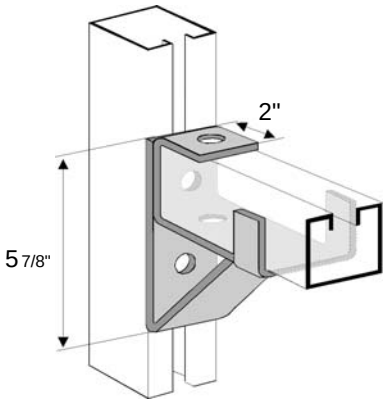

Wt./C 250 Lbs.
Std. Pkg. 5 Pcs.

Double Channel Bracket — SB121

Non Stock Item
Priced on Application

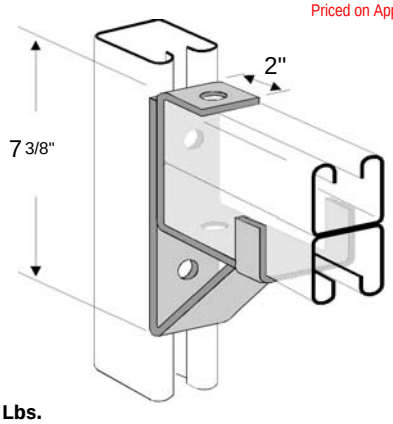

Wt./C 284 Lbs.
Std. Pkg. BULK

FITTING SPECIFICATIONS (unless noted): Hole Size-9/16" Diameter; Hole Spacing-13/16" from end and 1 7/8" on center. Width-1 1/2"; Thickness 1/4"

FINISHES AVAILABLE: Zinc Plated, Hot-Dipped Galvanized & Stainless Steel

TAYLORSTRUT™

MISCELLANEOUS FITTINGS

Channel Plate Bracket Only — SB125

Non-Stock Item
Priced on Application

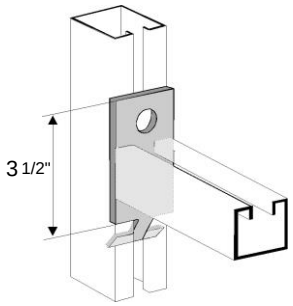

Finish: BARE METAL

Wt./C 45 Lbs.
Std. Pkg. BULK

Single Channel Bracket — SB130

S = Stocking Item
Other Sizes Available

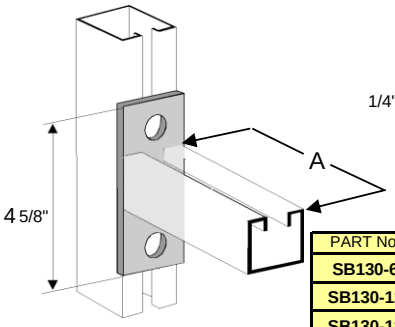

PART No.	A	Design Load	WT. Per 100
SB130-6	6"	1800	152 #
SB130-12	12"	850	232 #
SB130-18	18"	600	312 #
SB130-24	24"	400	450 #

Design Load Safety Factor 2.5

Single Channel Bracket — SB140

Non-Stock Item
Priced on Application

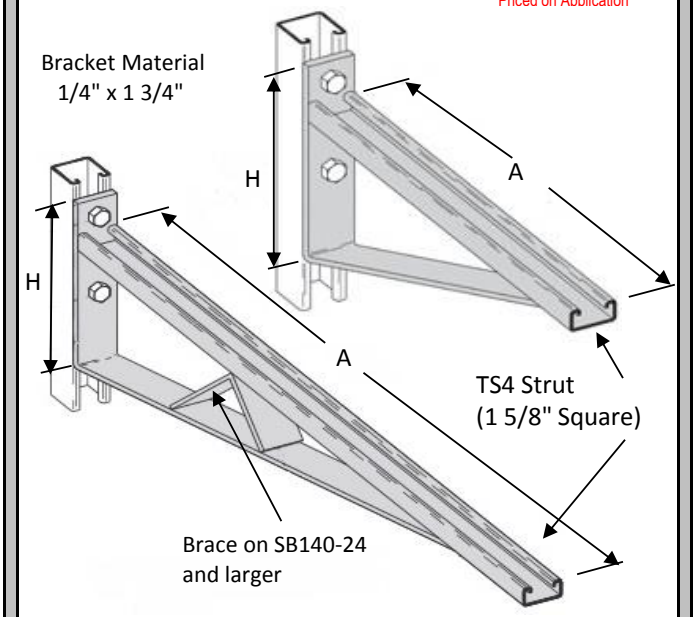

PART No.	A	H	Uniform Load
SB140-12	12"	8 3/4"	1500
SB140-15	15"	8 3/4"	1000
SB140-21	21"	8 3/4"	1000
SB140-24	24"	8 3/4"	900
SB140-27	27"	8 3/4"	900
SB140-33	33"	11 1/4"	800
SB140-39	39"	11 1/4"	600

FITTING SPECIFICATIONS *(unless noted)* : Hole Size-9/16" Diameter; Hole Spacing-13/16" from end and 1 7/8" on center. Width-1 5/8"; Thickness 1/4"

FINISHES AVAILABLE: Zinc Plating, Hot-Dipped Galvanized & Stainless Steel